Rochester Institute of Technology
RIT Digital Institutional Repository

Theses

7-19-1974

Laboratory Design for Instruction in Long Distance Communication for the Deaf

George Schieber

Follow this and additional works at: https://repository.rit.edu/theses

Recommended Citation
Schieber, George, "Laboratory Design for Instruction in Long Distance Communication for the Deaf" (1974). Thesis. Rochester Institute of Technology. Accessed from

This Thesis is brought to you for free and open access by the RIT Libraries. For more information, please contact repository@rit.edu.

LABORATORY DESIGN FOR INSTRUCTION IN LONG DISTANCE COMMUNICATION FOR THE DEAF

By

George W. Schieber

Candidate for the Master of Fine Arts

in the College of Fine and Applied Arts

of the Rochester Institute of Technology

July 19, 1974

Advisor: Toby Thompson

TABLE OF CONTENTS

		Page
I	List of Illustrations	iii
II	Acknowledgements	iv
III	Preface	v
IV	Results of Survey	1
	A. Conclusions of Survey	4
	B. Summary	6
V	Room Design Considerations	7
VI	Floor Plan	11
	A. Planning Considerations	12
	B. Second Room Arrangement	16
VII	Audio-Visual Center	20
	A. Rear Screen Projection Rationale	25
	B. Other Design Considerations	32
VIII	Control Panel	39
IX	Telephone Practicum Station	42
	A. Construction	50
X	Pay Phone Station	52
XI	Teletype	60
	A. Design Considerations	64
	B. Size	64
	C. Sound Control	64

Page

D. Ventilation.....65

E. Lighting.....65

XII Vista Telephone.....66

A. Design Considerations.....73

B. Minimum Distances.....73

C. Lighting.....73

D. Privacy.....73

E. Construction.....74

XIII Appendix.....75

A. Early Stages of Construction.....76,77

B. Pre-Shop Drawing.....78

C. Equipment During Installation.....91

D. Finished Laboratory.....94

LIST OF ILLUSTRATIONS

Figure		Page
1.	Photographs of Model-Room 1	14,15
2.	Floor Plan-Room 2	18,19
3.	Audio-Visual Unit	21
4.	Mock-up, Front	23
5.	Mock-up, Back	24
6.	Equipment Housed in A.V.C	27
7.	Seating Arrangement	35
8.	Mirror Placement	35
9.	Mirror Size Calculation	36
10.	Control Panel	40
11.	Telephone Practicum Station	43
12.	Human Factors - Telephone Practicum	44
13.	Equipment in Practicum Station	45
14.	Seating	47
15.	Wiring Track	51
16.	Pay Phone Station	53
17.	Human Factors - Pay Phone Station	54
18.	Equipment in Pay Phone Station	55
19.	Air Flow Thru Walls	58
20.	Teletype Booths	61

Figure Page

21. Human Factors - Teletype Station.....62

22. Vista Telephone Station.....67

23. Human Factors - Vista Telephone.....68

24. Early Vista Telephone Design.....70,71

25. Early Stages of Construction.....76,77

26. Pre-Shop Drawings.....79-90

27. Equipment During Installation.....92,93

28. Finished Room.....95-96

ACKNOWLEDGEMENTS

Thesis Committee

Toby Thompson, Advisor
Dr. Donald Johnson
Will Larkin, Center for Communications Research

PREFACE

My interest in educational facilities for the deaf began in the fall of 1972. Overhearing a deaf student's request for assistance in making a long distance telephone call, I became curious as to how their problem of telephone communication is resolved. After consulting with several persons on this matter, I was referred to Dr. Donald Johnson, Director of Communications for NTID.

During a meeting with Dr. Johnson, he suggested another problem in regard to telephone communication; the lack of skill of students to use the telephone because of the dearth of proper training facilities. Dr. Johnson's years of working with the deaf had convinced him that such training was essential.

Since there were no known precedents for such a facility, the question was "Where do I begin?" As a designer and art teacher, I found the opportunity to custom-design an educational facility, a very stimulating and realistic design problem.

The following material will discuss the various aspects, from concept to completion, of designing a laboratory for instruction in long distance communication for the deaf.

RESULTS OF SURVEY

Over the course of the past three years at NTID many students have indicated that they would like to have a special course which trains them in the use of the telephone and other aids used by the deaf in long distance communication. In an effort to determine the actual depth of the need for a course in "Communication Aids" a questionnaire was recently administered to 130 NTID students who were enrolled in the course "Introduction To Communication Skills" during the Fall Quarter, 1972 (See Addenda A). The answers to the questionnaires indicated that approximately 75% of the students to whom the questionnaire was administered own their own hearing aids at the present time. However, 31% of those students who own hearing aids wear them seldom, only in special situations or never. Eighteen percent of those students that do not own hearing aids at the present time indicated that they would like to try to see if they could benefit from the use of amplification while an additional 6% said they would like to try one only if they could have special classes on how to use the hearing aid properly.

Of those students who own their own hearing aids, 38% indicated that they attempt to use that hearing aid on the telephone, but can only use it with close friends and/or relatives. The remainder say that they can't use their hearing aids on the telephone at all. Nine percent of those who

---

Johnson, Donald D., and Rubenstein, Charissa, "Communication Aids Course - Rationales, Problem Statements and Objectives." (Survey conducted at NTID Communication Center, Rochester, New, York, Dec. 31, 1972), p.1,2,3,44.

indicated that they do attempt to use the telephone say that they would use the telephone more often if they knew how to use it properly; an additional 25% indicated that they would use the phone more often if they felt they would understand the other person's speech better. Forty-eight percent of the students who already use the telephone would like to take a special course to learn how to use it better. Forty-seven percent who do not presently use the telephone would like to take a course to learn how to use it.

When asked what types of information should be included in a course emphasizing the use of the telephone, 14% of the students indicated that the course should only include actual practicum in telephone usage while an additional 54% said the course should include some instruction in how to use the phone properly, but mostly actual practicum. In an overall course covering various communication aids at present on the market, 48% of the students felt that the telephone should be offered, 15% indicated the vibrating alarm clock, 58% the TTY (teletypewriter), 63% the vistaphone (picture telephone), and 31% special headsets for amplifying television. When asked how often per week the students should meet for a course in Communication Aids, 12% indicated one hour per week, 14% two hours per week and 60% said that it depends on the need of each student.

The above information indicated that there is indeed a large number of students who would be

---

[1] Ibid., p. 2.

interested in being involved in a course on Communication Aids. In addition, this course should not include only the use of the telephone, but should offer information and practicum concerning the use of the TTY, the vistaphone and special amplifying devices for use with television. Moreover, the course should meet several times a week and should include a great deal of actual practicum in the use of these aids. To emphasize the intensity of feeling which the students have concerning the importance of such a course, 10% said that the course in how to use the phone properly should be required of all NTID students who have some hearing while 57% said that it should be offered to all NTID students, but not required. An additional 18% said that such a course should be required only if the student will need to use the telephone on the job.

Also indicated above is the fact that the course should be divided into two parts, lectures on the proper use of various communication aids and actual practicum in using them. The practicum section should be emphasized.

---

[1]ibid., p. 3.

CONCLUSIONS FROM SURVEY

In a questionnaire administered to 130 students enrolled in the course "Introduction To Communication Skills" during the Fall Quarter, 1972, 48% of the students that already used the telephone indicated that they would like to take a special course to learn how to use it better. An additional 47% of the students who do not presently use the telephone indicated that they would like to take a course to learn how to use it. It is a fact that although many students desire to learn how to either use the telephone better or would like to learn how to use it, it will not be possible for all of these students to obtain the appropriate skills for successful telephone utilization because of the type and nature of their hearing loss. Skill levels for telephone usage which could be developed with appropriate training might be found on at least three levels. First, there are many students who have enough hearing and good enough speech so they could utilize the telephone in essentially the same manner as a hearing person. Second, some students do not have enough hearing to understand speech on the telephone, but have intelligible speech themselves and enough hearing to learn telephone code based on speech sound. A third type of student will not be able, because of no usable hearing, to utilize the telephone himself, but must work through an interpreter. These three types of students have very different needs in relation to learning information concerning telephone usage. The latter

---

[1] ibid., p.4.

two types of students might more appropriately benefit from learning how to use such devices as the TTY(teletypewriter) along with an appropriate knowledge of the telephone directory, telephone etiquette, time zones, etc.

It appears, therefore, that all students might benefit to some extent by learning certain types of information related to long distance communication. Even those students who are fortunate enough to be able to utilize the telephone in the standard manner might benefit from knowing how to utilize the TTY and other communication devices. It is important that the three different levels of students be identified upon entrance to NTID so that they might be directed appropriately when programs concerning the use of communication aids are available. Information concerning on which level the various entering NTID students might function in a course on communication aids may be obtained partially through existing audiometric information. However, additional information concerning the desires of the student to learn the various modes of long distance communication could be elicited during the time of the students initial audiometric evaluation.

---

[1]ibid.,p.4.

SUMMARY

In summary, the data derived from a questionnaire administered to 130 NTID students has been utilized to determine the necessity for offering a course in Communication devices to all NTID students. The data demonstrated that there is indeed a need to provide such a course. Moreover, the information derived from the questionnaire has helped to identify the content of the proposed course. Three distinct groups have been identified based upon varying needs for learning information about communication devices. These three groups have been primarily separated on the basis of their puretone audiometric data and thus, expectations concerning possibilities for obtaining varying levels of listening skills.[1]

---

[1] Johnson, Donald D., and Rubenstein, Charissa, "Communication Aids Course - Rationales, Problem Statements and Objectives." (Survey conducted at NTID Communication Center, Rochester, New, York, Dec. 31, 1972),p.1,2,3,44.

ROOM DESIGN CONSIDERATIONS

Many questions had to be explored before actual facility design could begin.

I. Instructional considerations

A. The type of instruction to be used

1. Group lecture

2. Individualized instruction

3. Programed learning

4. Demonstration

5. Practicum

B. Audio-Visual

1. The need for such a center

2. The utilization of audio and visual aids in learning situations by the deaf

3. The possible use of existing programs

4. The convenient use of media

5. Group of individual instruction

6. The means of communication between teacher and student

7. Individual volume control in group and individual instruction

8. The ability of the student to see the teacher in the dark

II. Physical considerations

A. Teacher activities

1. The need for a teacher work station

2. Length of classes

3. Teacher comfort, standing or sitting

B. Student activities

1. Length of sessions

2. Comfort considerations

C. Persons using the facility

1. Size of groups

2. Age of groups

3. Male, female or mixed

4. Visitors

III. Enviromental considerations

A. Lighting

1. Specialized lighting

a) General room lighting

b) Work areas

c) Exhibit lighting

d) Special lighting for lip reading and manual communication

2. Types of lighting

a) Florescent

b) Incandescent

c) Combination of both

d) Levels of lighting for various situations

3. Warm of cool lighting

a) Effects on eye fatigue

b) Health considerations

B. Sound

1. Special sound control problems

a) Ventilation systems

b) Loud machines

2. Sound proofing materials

C. Color

1. Color schemes and their effects on studying

2. Color and eye fatigue

3. Warm and cool color schemes

4. Effective use of color coding

D. Temperature, relative to learning

1. The need for air conditioning

2. Coat storage

9. The seating capacity of the center

10. The type of seating

11. Room design possibilities for both group and individual instruction

FLOOR PLAN

PLANNING CONSIDERATIONS

In the early stages of planning some question arose as to where the room would be located. Since the room in the new NTID building would not be completed in time, the equipment would be housed in a temporary class-room for about a year. The facility, therefore, had to be designed so it could be dismantled and reassembled in the permanent location at a later date. The flexibility derived from modular design makes it possible to adapt the equipment to rooms of different sizes and dissimiliar floor plans.

Model of Room

Floor Plan Arrangement of First Room

Photographs of Model - Room 1

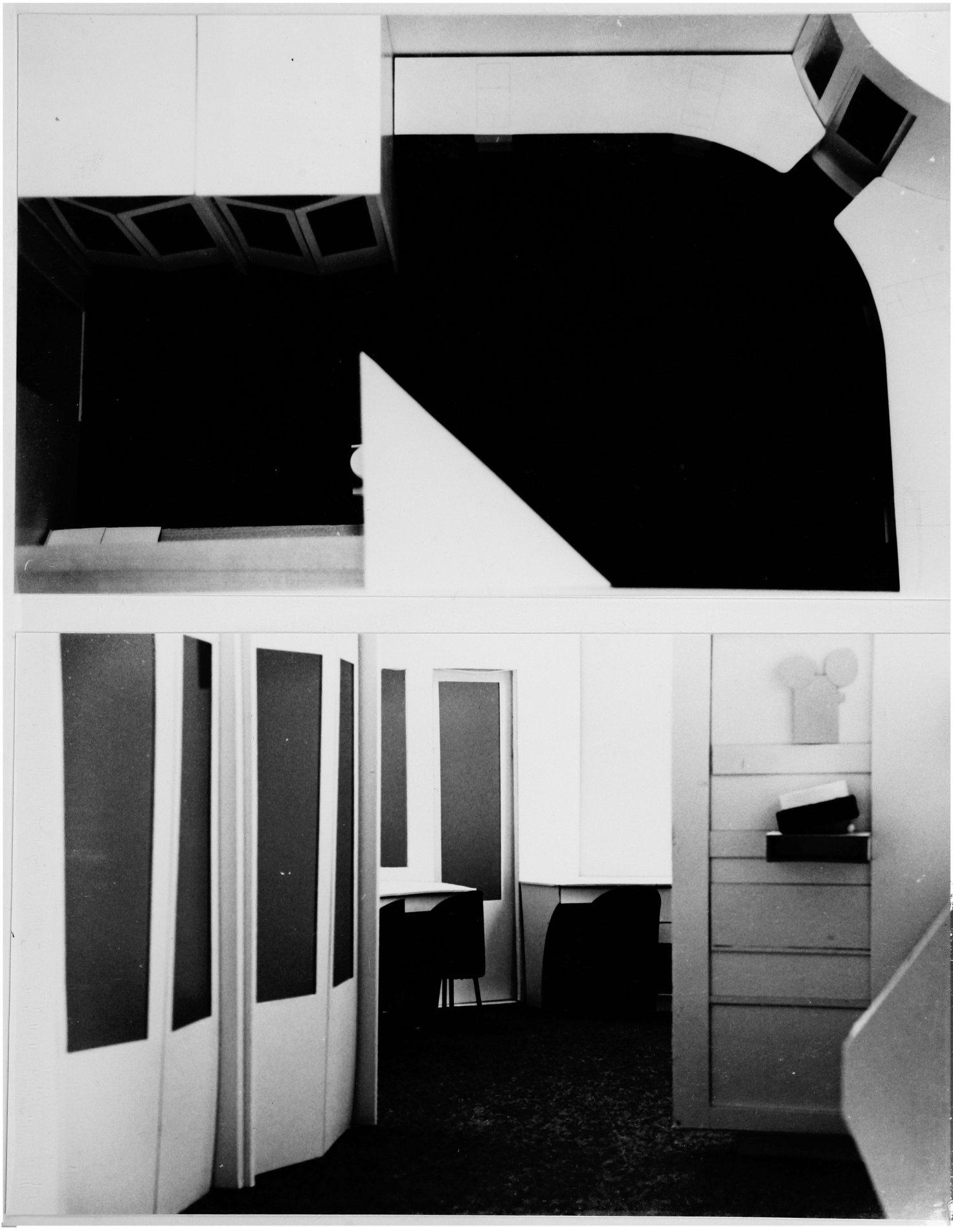

Figure 1

Second Room Arrangement

Floor Plan

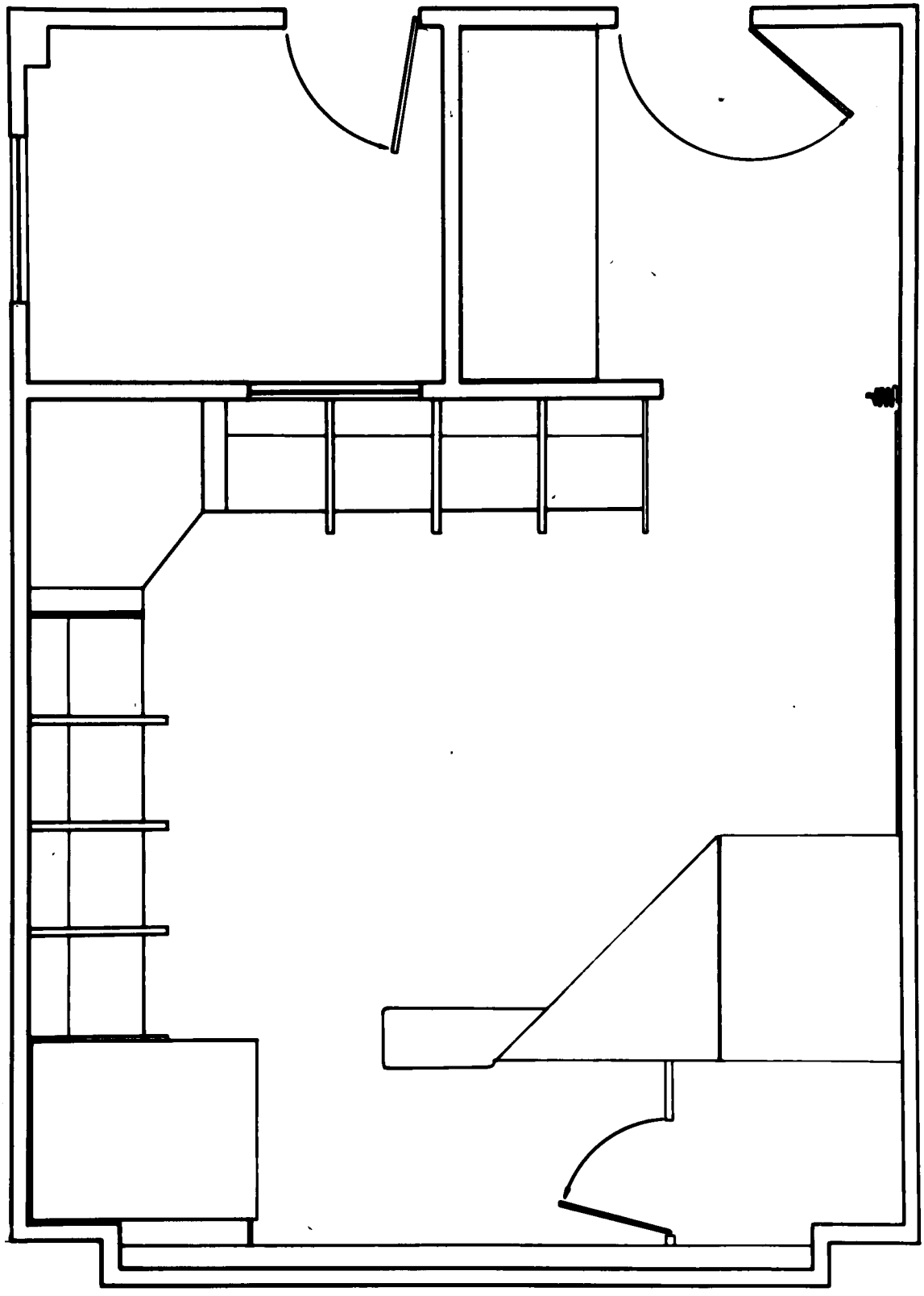

Floor Plan - Room 2

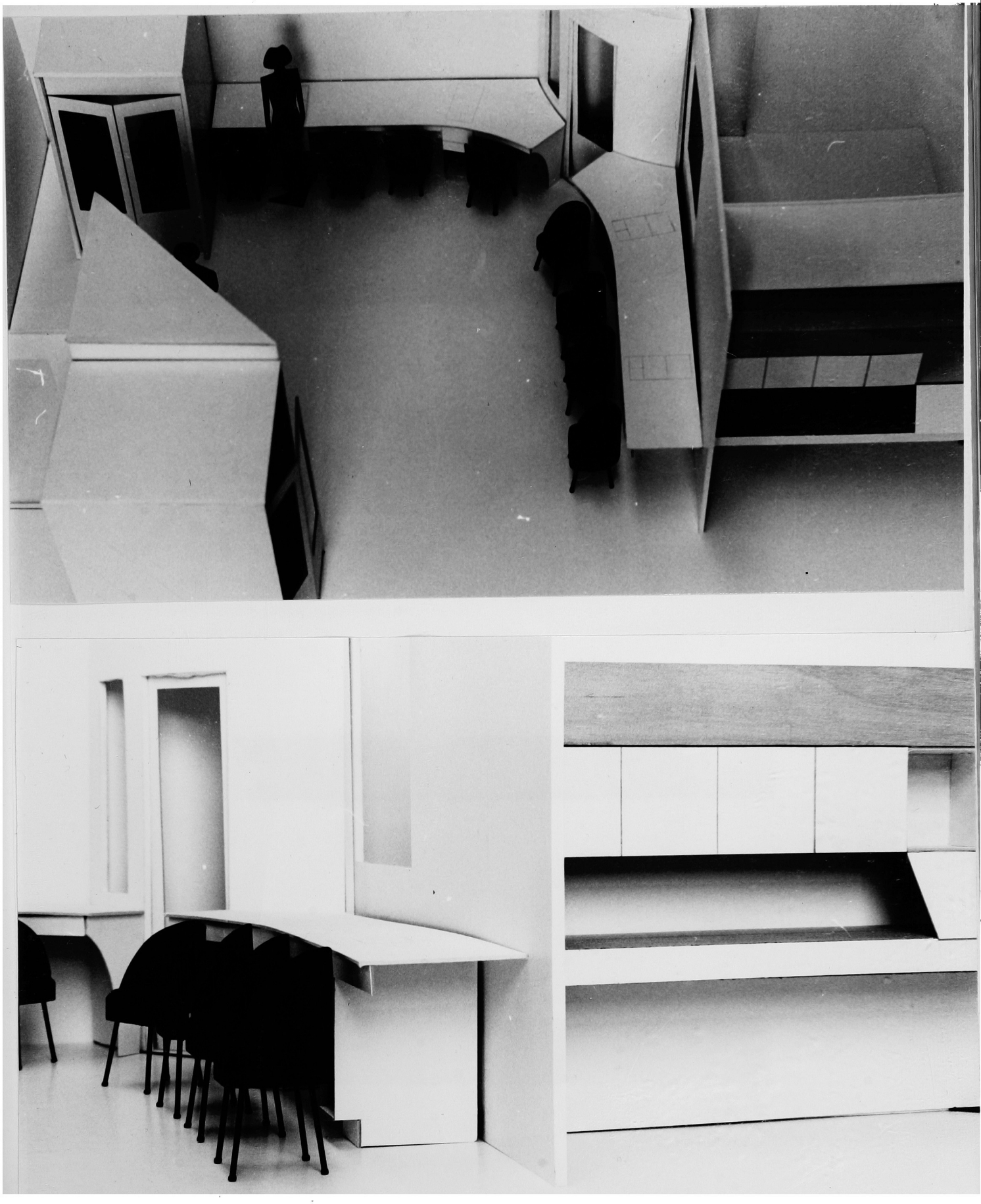

Figure 2

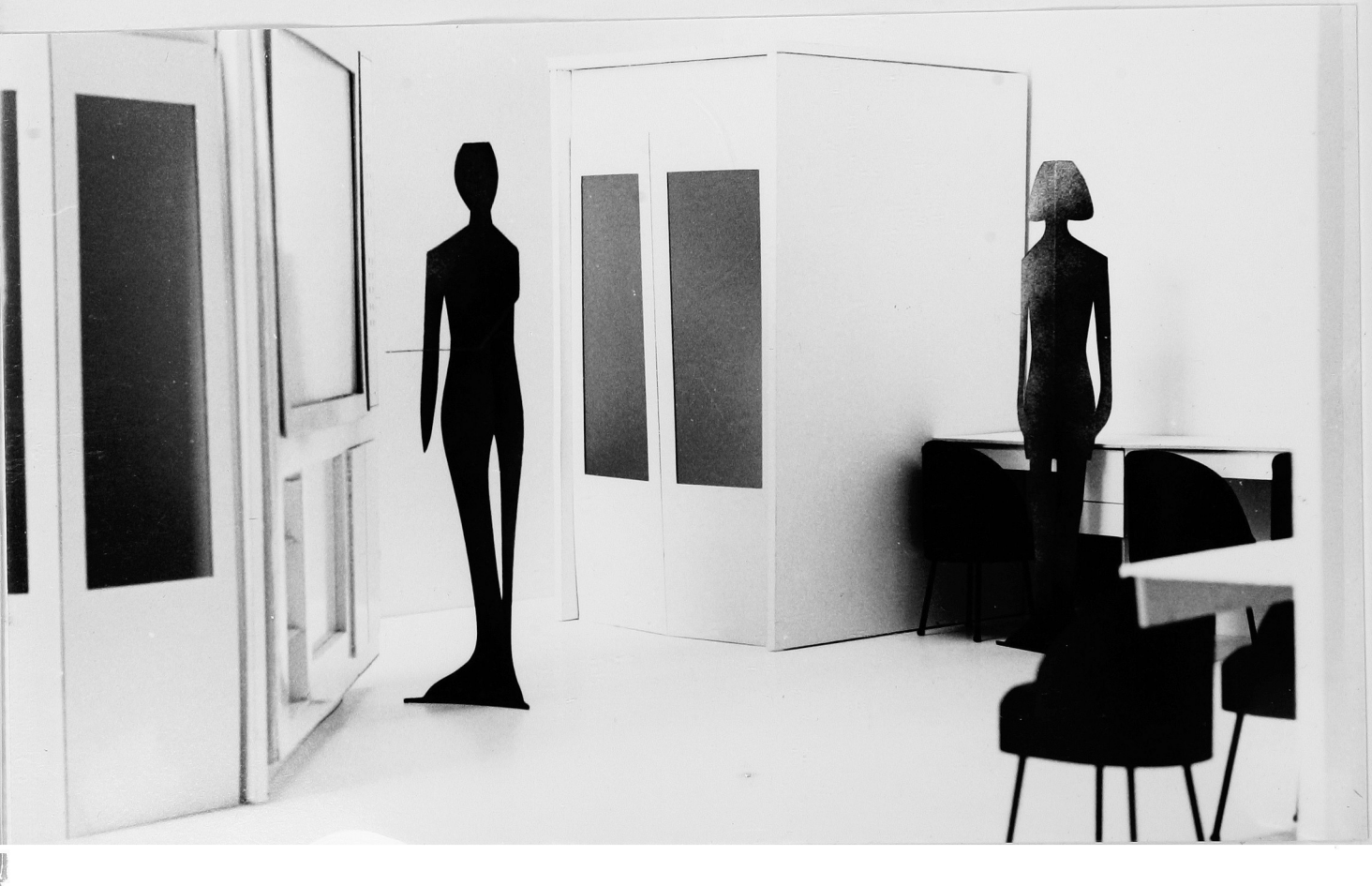

AUDIO-VISUAL CENTER

Audio- Visual Unit

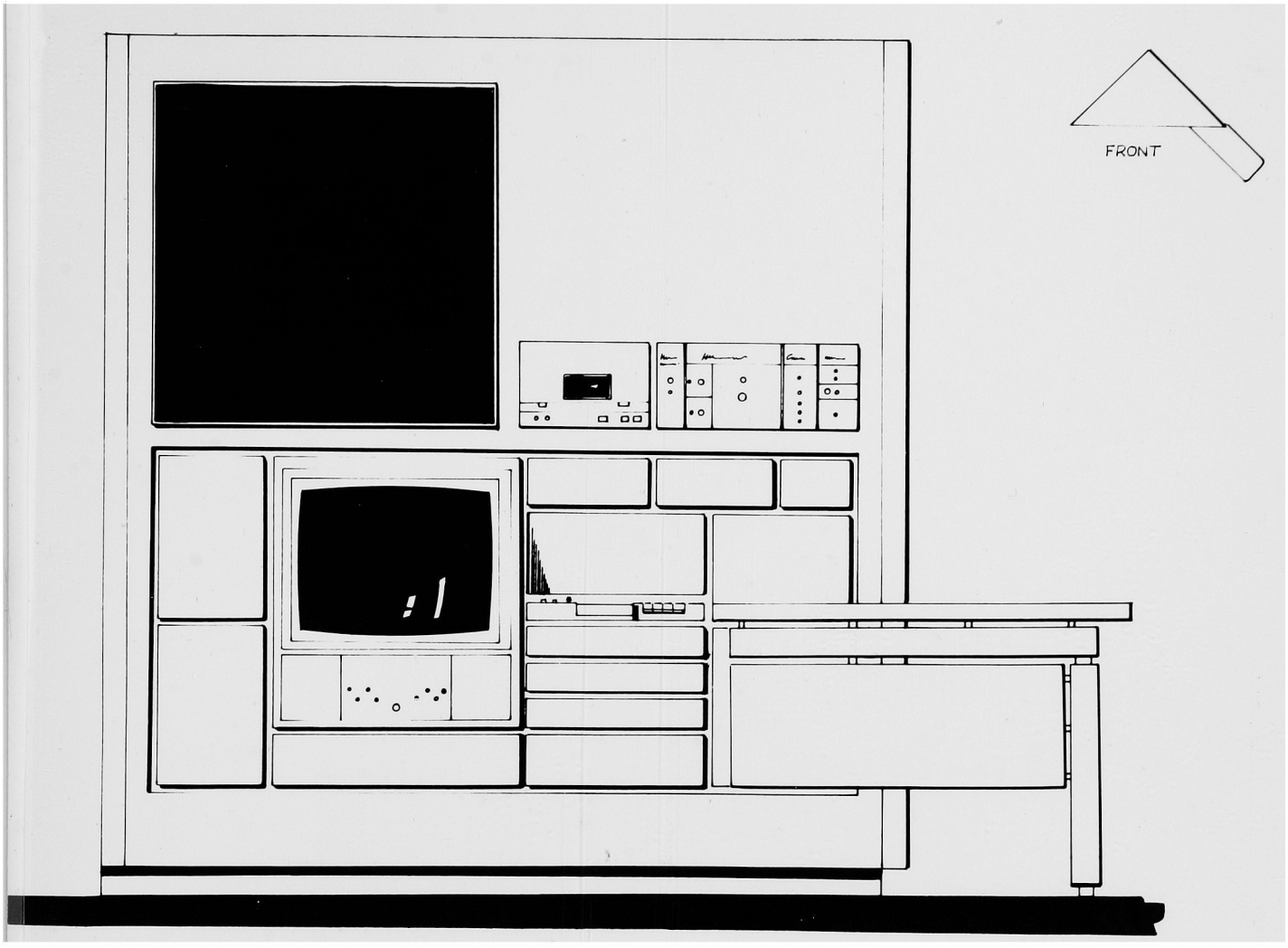

Figure 3

Mock-Up of Audio-Visual Center
for testing purposes

Mock-up, Front

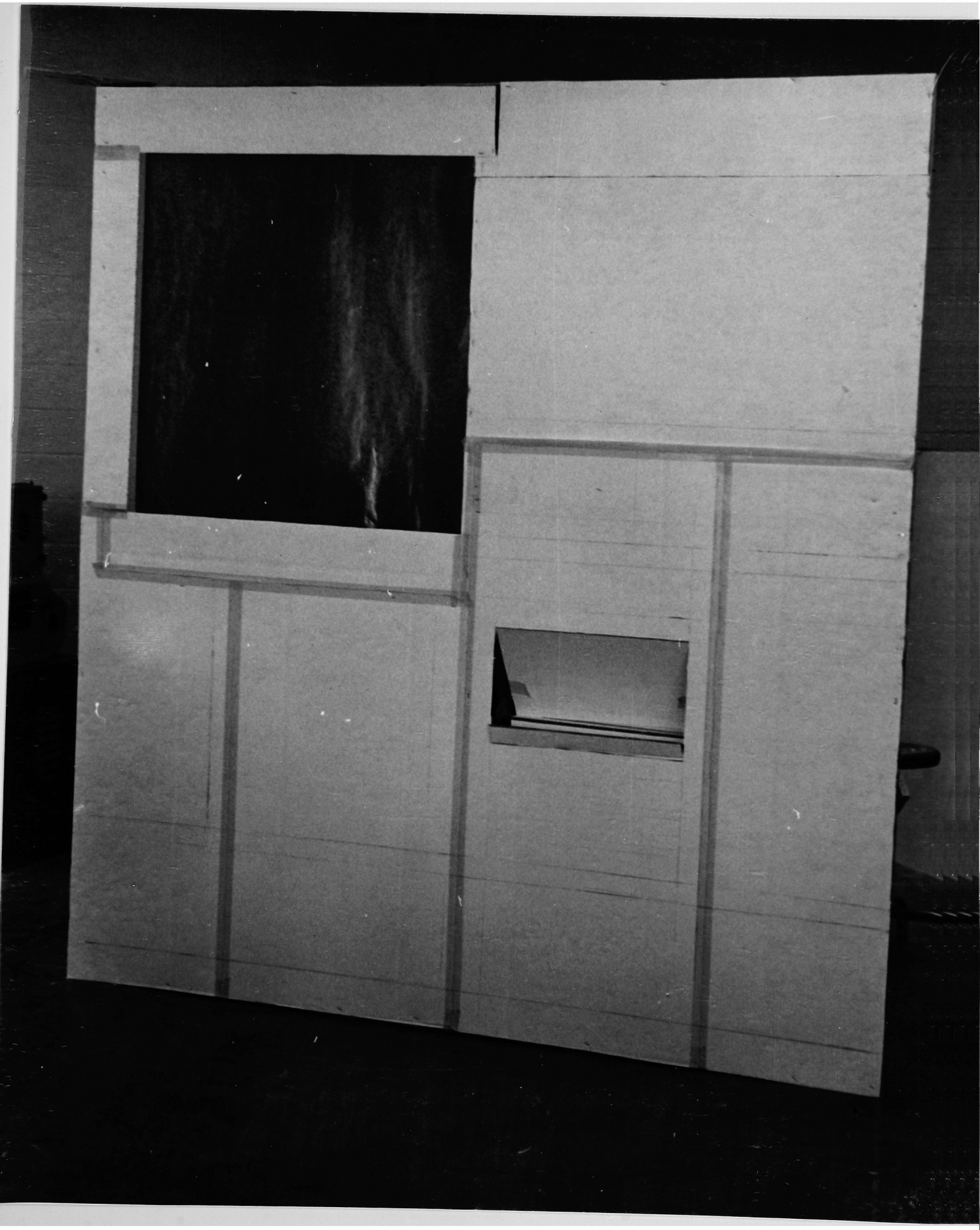

Figure 4

Mock-up, Back

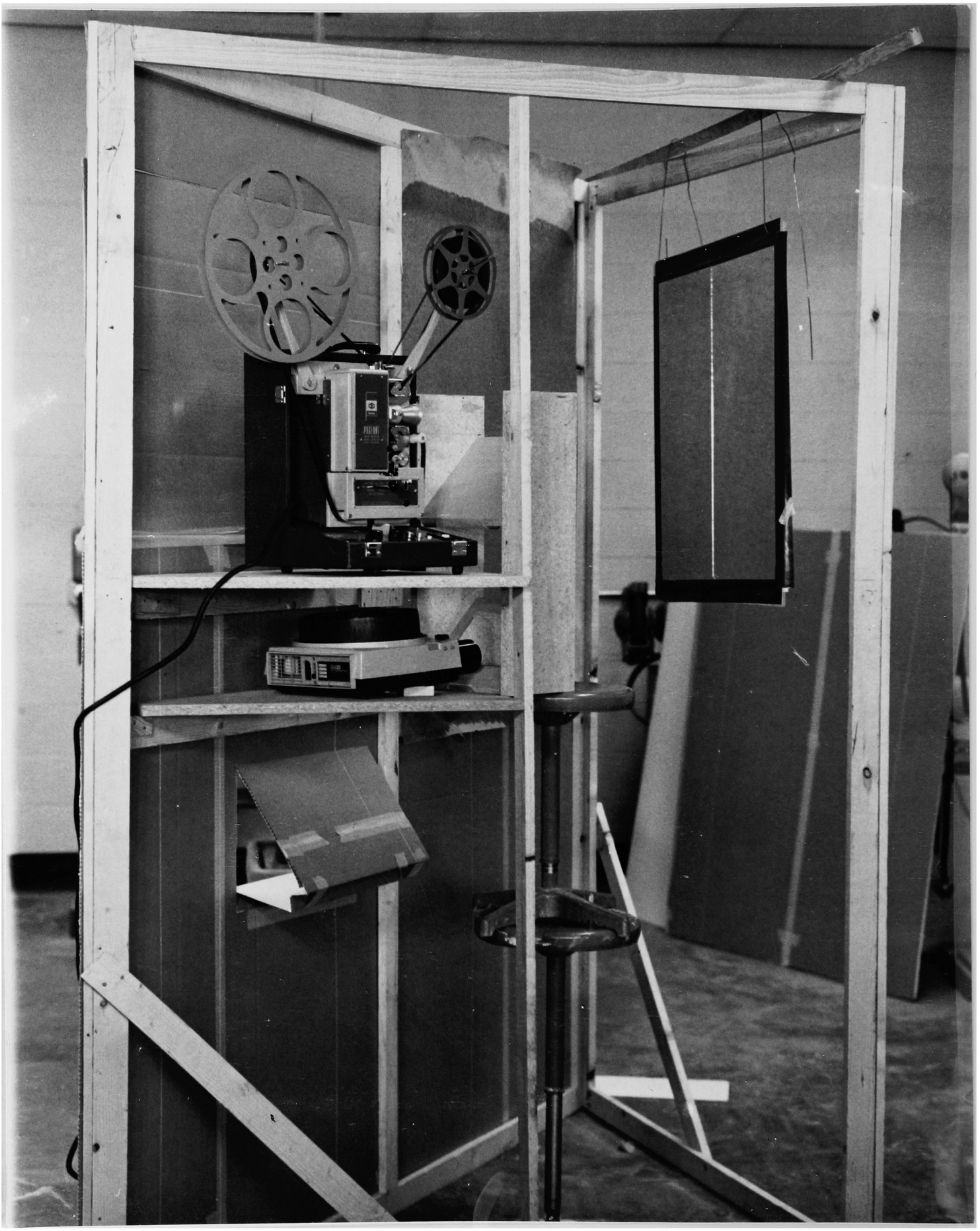

Figure 5

Audio-Visual Center

Some major considerations pertaining to this area are compactness and convenience as well as use as a control center for the room. The teacher has to be able to function near the screen for the purpose of explanation through signing and lip reading. A rear screen projection technique was selected for the following reasons:

"A. Instructor always in the front

"1. He has complete eye-to-eye communication and control.

"2. He may see and refer to the screen image; point out features.

"3. Normal room lighting allows note taking and audience references to other materials and facilities.

"4. The instructor may stop and start either projector at any time.

"B. Projection equipment is removed from the audience area.

"1. Concealment of the projection equipment reduces noise, light, and other movement distraction.

"2. Distracting shadows on the screen, and audience or instructor cut-in problems are eliminated since the projection path is behind the screen.

"C. Packaging or rear screen facilities into a fixed assembly of associated parts has these advantages.

"1. The system is instantly ready to respond with perfect performance at the push of a button.

"2. Eliminates hunting of equipment, extension cords, stands, screens, projectors, and the usual headaches which have usually prevented many people from using projected visuals."

---

[1]Da-lite Screen Company,Inc., Rear-Projection Screens. Technical Manual (New Rochelle, New York:), p.3.

Equipment housed in Audio-Visual Unit

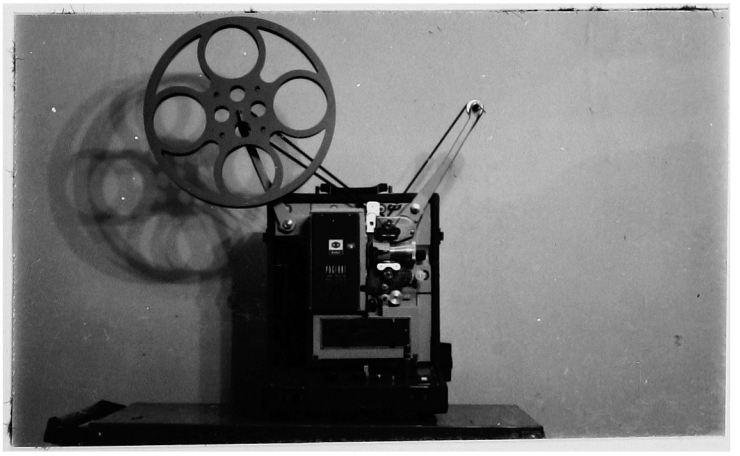

Figure 6

Figure 6

Figure 6

Figure 6

Other Design Considerations

The size and shape of the AVC* would be determined by the type and amount of equipment to be contained therein. The unit needed to incorporate equipment for slides, film, and television. The unit should also house student headset pre-amplifiers, as well as the teacher's headset microphone amplifier. A tape recorder for recording and using pre-recorded messages was also deemed necessary. All the audio-visual equipment, as well as the room lights, should be regulated from a central control panel on the unit. Once the equipment and its use was decided upon, the final shape of the unit could be considered.

A triangular configuration was determined to give maximum screen exposure to a semi-circular seating arrangement, as indicated in (Fig. 7).

The most brilliant rear screen surface for a dark room is considered to be a light-colored matte surface screen. Since adequate room lighting is necessary for signing beside the screen, a dark gray gives the brightest image.[1] Screens are available in

*The Audio-Visual Center will be hereinafter referred to in this paper as AVC.

[1]Eastman Kodak Company, Rear-Projection Cabinets. Kodak phamphlet No. S-29 (Rochester, New York:), p. 4.

glass, soft plastic, or rigid plastic. Although all have particular advantages, rigid plastic was selected because of its durability, light weight, and ease of installation. A square shaped screen was chosen despite the obvious 3:4 proportion of slide and film images. This shape will allow slides to be shown in the vertical positions without cutting off the top and bottom of the picture.

Of major concern were the mechanics of projecting the image onto the rear screen. Using mirrors, the image must reflect either once or three times to avoid picture reversal on the screen.[1] My original idea was to use two projectors on one large mirror which reflected to the viewing area. Due to the distance between the two projector lenses, about twelve inches, keystoning could occur. It was essential that both images be projected on approximately the same horizontal plane. The film projector, because of the large reels, had to be placed near-center of the screen. This positioning required the slide projector to be positioned at the bottom of the

had to get smaller one didn't fit

[1]Kodak, Rear-Projection Cabinets, p. 7.

screen.

The slide image was raised by using a three-mirror reflection system. This raised the image and also prevented image reversal. (Fig. 8)

A thirty-six inch screen format was considered to be sufficiently large to create a bright, easily seen image.

The next task was to estimate the length of the projected beam, thru either one or three mirrors, from its source to the screen.

By using folded paper cones (Fig. 9), the mirror sizes and beam lengths were established. Once the desired final image size and the beam length were known, the focal length of the lens was calculated using projection charts. The lenses selected were a two-inch Buhl lens for the Kodak Ectagraphic slide projector and a five-eighth inch Buhl lens for the Kodak film projector.

Still sitting on inside packing box to get appropriate height. Inappropriate planning.

Standard glass reflection mirrors are not acceptable for rear screen projection because the refraction of light in glass produces a ghost image which increases in proportion to the thickness of the glass.[1] The mirrors selected, therefore, are the

---

[1] Eastman Kodak Company, Rear-Projection Cabinets. Kodak phamphlet No. S-29. (Rochester, New York:), p. 5.

Seating Arrangement

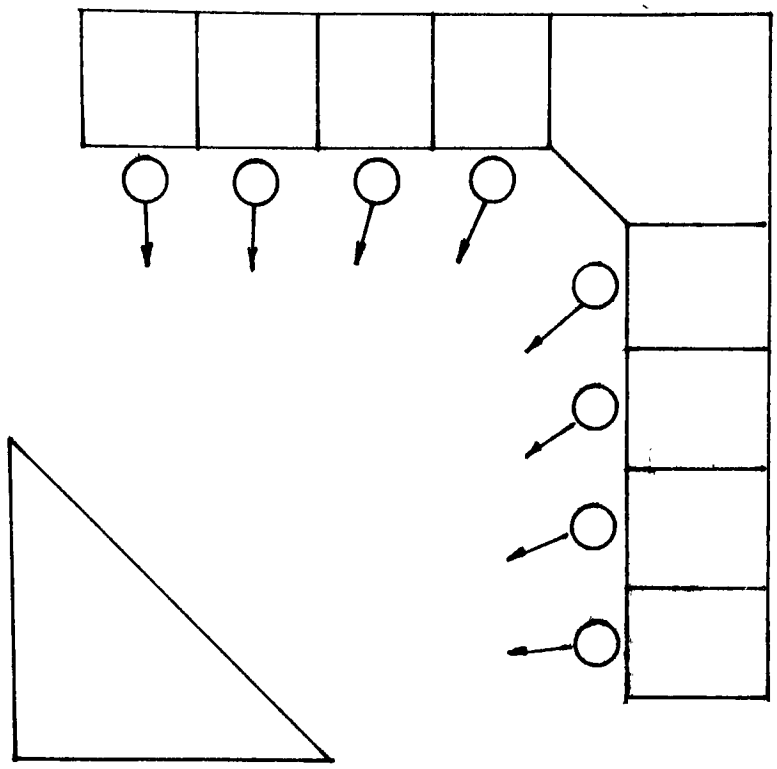

Figure 7

Mirror Placement

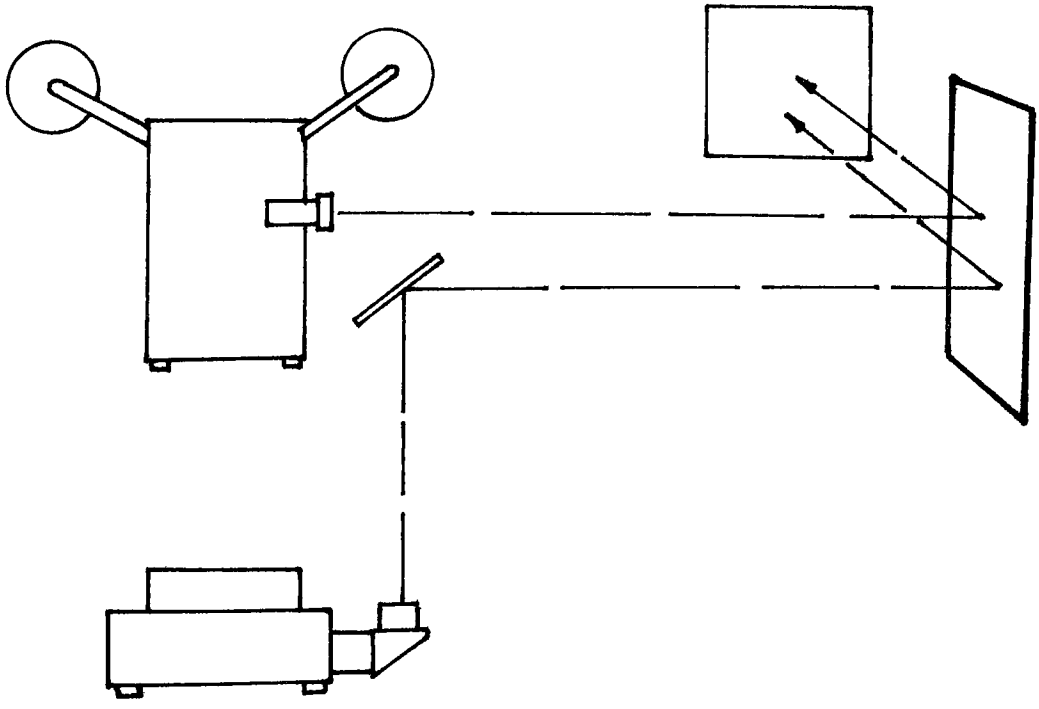

Figure 8

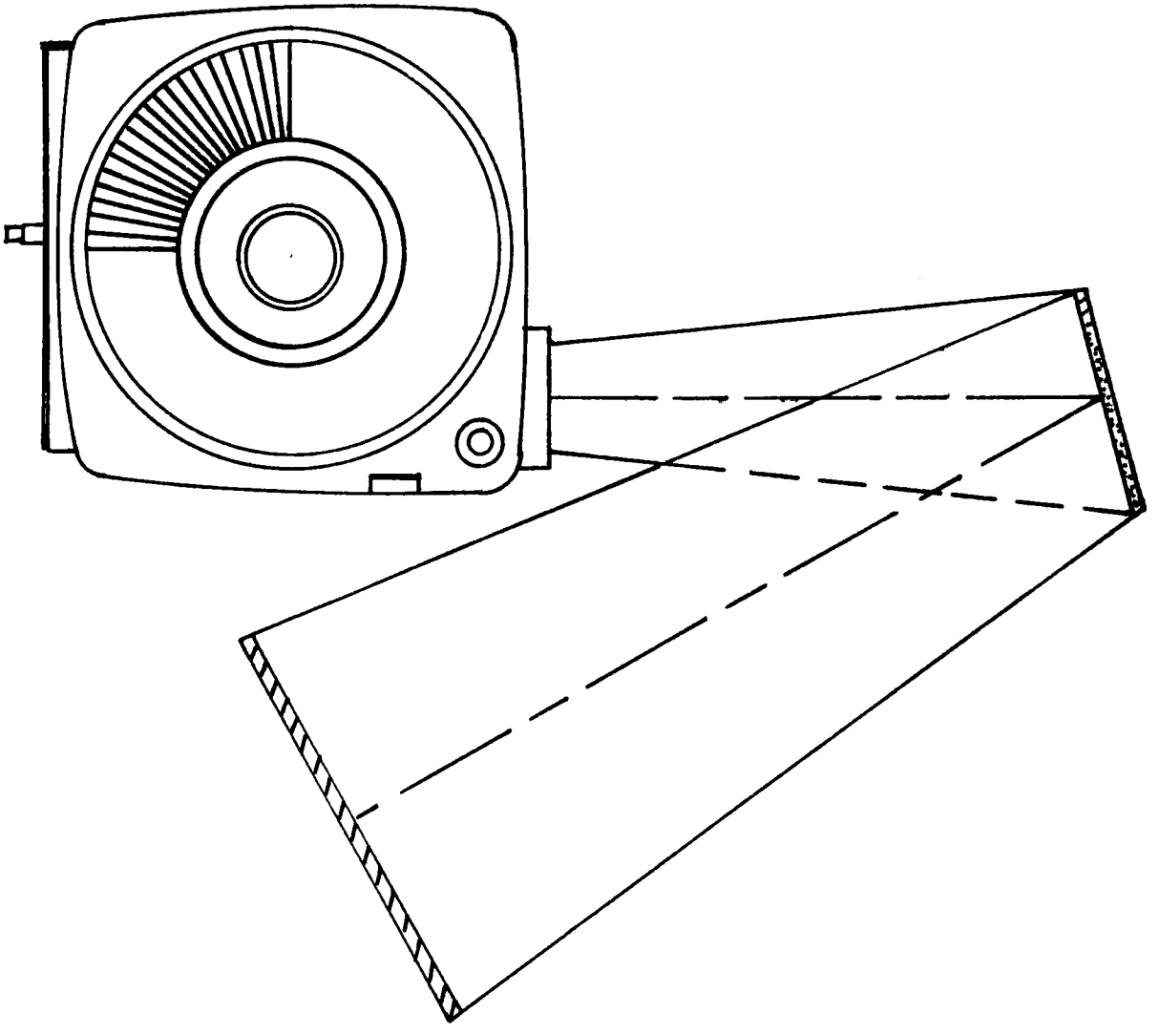

Figure 9

front-surface type, which produce ghost-free images with eighty-five percent average reflectance.

An important part of the audio-communication system is the teacher's headset. This headset, with a built-in microphone, allows the teacher to listen to the program and talk to the students through their amplified headsets; thus he has his hands free for signing when needed.

female teachers don't use headset instead use extension of speaker

also frees teacher to walk about room without hard wire headset.

Housed in the AVC are two amplifiers for the students' headsets. A separate amplifier is provided for the teacher's headset and microphone. This was selected after extensive research in tone quality and frequency response.

A twenty-three inch Setchell-Carlson color television was selected for the AVC. This institutional model, with solid-state design, was chosen because of its high quality and dependability.

A Sony cassette video tape model 1000 was used in conjunction with the Setchell-Carlson Television. This feature allows the use of prepared cassette video tapes designed especially for deaf students. There is also the added versatility of using cable television from the media center, as well as commercial

Needs to have special cover to protect tape heads from dust. Not planned for

programs.

All electronic equipment used in the AVC was selected on the recommendations of the Center for Communications Research, Rochester, New York. This organizations engages in independent research and development of educational hardware for NTID.

CONTROL PANEL

All functions of the AVC are regulated at the control panel (**Fig. 10**). The functions (master switch, sound, equipment operation and room lights) are arranged in a left to right flow orientation. This enables the instructor to conveniently select the functions at the panel.

The following is a left to right operational discription of the panel.

Section A: contains the master switch with pilot light.

Section B: Deals with sound.

B-1 A sound-activated light indicates to deaf students visually that sound is being transmitted. If they hear no sound but see the light blinking, they would know to adjust their volume control. An on/off switch is provided so that after adjustments are made, the light may be eliminated if it is distracting.

B-2 This contains an external speaker, volume control, an on/off switch. This external speaker allows hearing persons to listen to the programs and deaf students to use hearing aids if desired.

B-3 The sound mode is a dial switch to determine which sould track is open to the students' headsets. For example, if the television were being used, the sound mode switch set on television would deliver this sound to the students' headsets.

B-4 The tape recorder can be used by itself with students or in conjunction with other audio-visual equipment. The recorder, for example, might be used with a silent film or slide show. A sync pulse added to the tape will enable the instructor to use automatic change, sound synchronized, slide programs.

B-5 This signal-activated light warns the student the message is about to begin (all tape programs will have magnetic pulse, "ready" signals on their leader.)

Master control that is different from projectors

Section C: pertains to equipment operation. Projectors are activated from these switches.

C-1 By plugging a remote control cord into this slide-change cord jack, the teacher can manually change, stop, and reverse slides while remaining beside the screen.

Section D: controls all the room lighting.

D-1 These are the most used light switches; they control the room lights.

D-2 Rheostat controlled incandescent, indirect lighting is built into the top of the AVC. This indirect, soft, glare-free light is used for low-level room illumination when rear screen projection is in use. When necessary, the lighting level can be increased to a level adequate for taking notes.

D-3 There will be times when the teacher must use signing-lights, while signing, in relation to a visual program. This requires that the teacher's face and hands be illuminated while the rest of the room remains dark. A controlled, two-point, spot lighting system eliminates the possibility of "washing out" the rear screen image. The two lights would be placed a 45° angles from the instructor with a 2-1 lighting ratio. The key and fill lighting system allows modeling of the features for easier identification of facial expressions and mouth configurations.

Several panel layouts were designed and tested with lay persons as well as teachers. The layout selected was considered by both groups to be easiest to understand and operate.

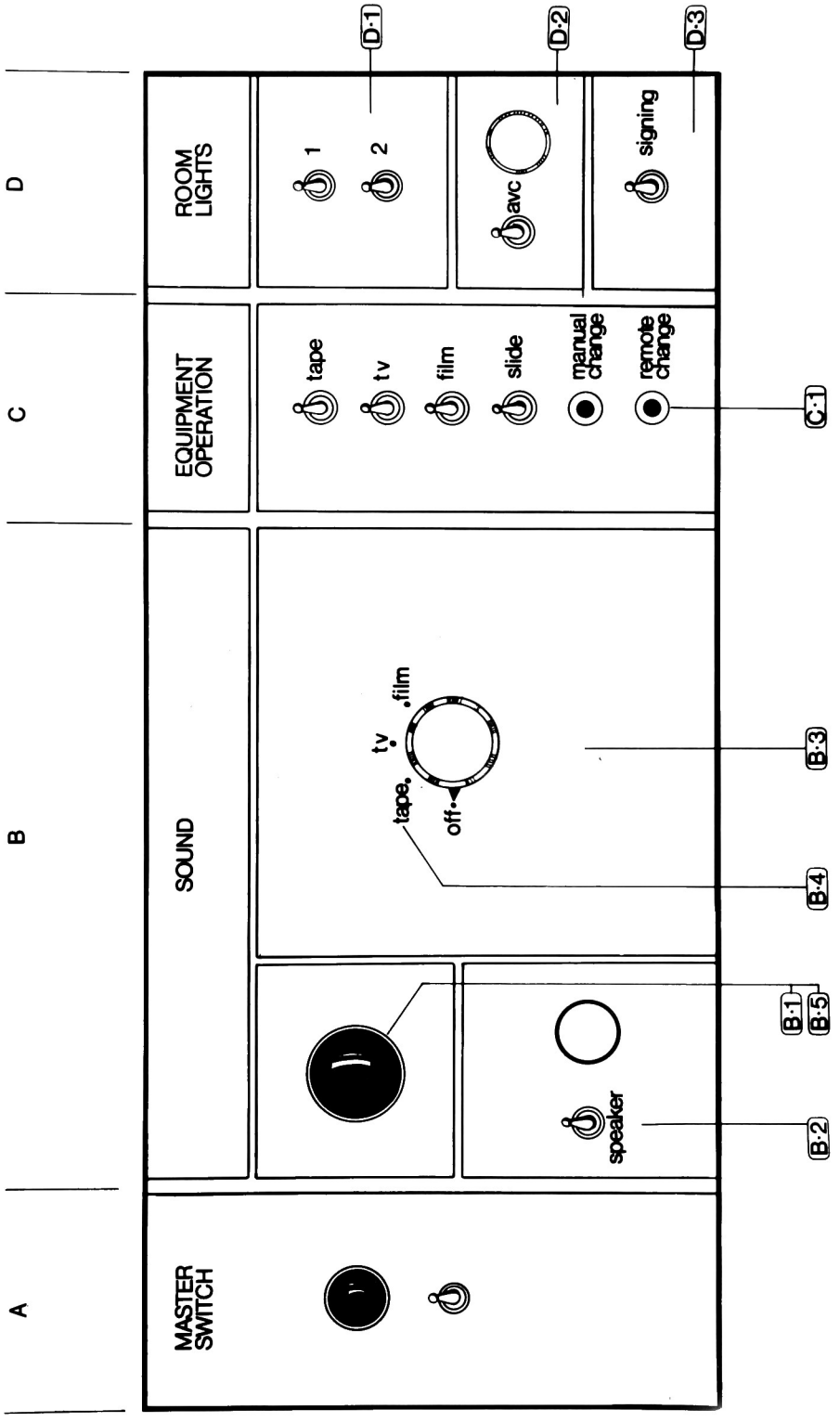
A
B
C
D
MASTER SWITCH
SOUND
EQUIPMENT OPERATION
ROOM LIGHTS
tape
tv
film
slide
manual change
remote change
1
2
avc
signing
tape
tv
film
off
speaker
D-1
D-2
D-3
C-1
B-3
B-4
B-1
B-5
B-2

Figure 10

TELEPHONE PRACTICUM STATION

Telephone Practicum Station

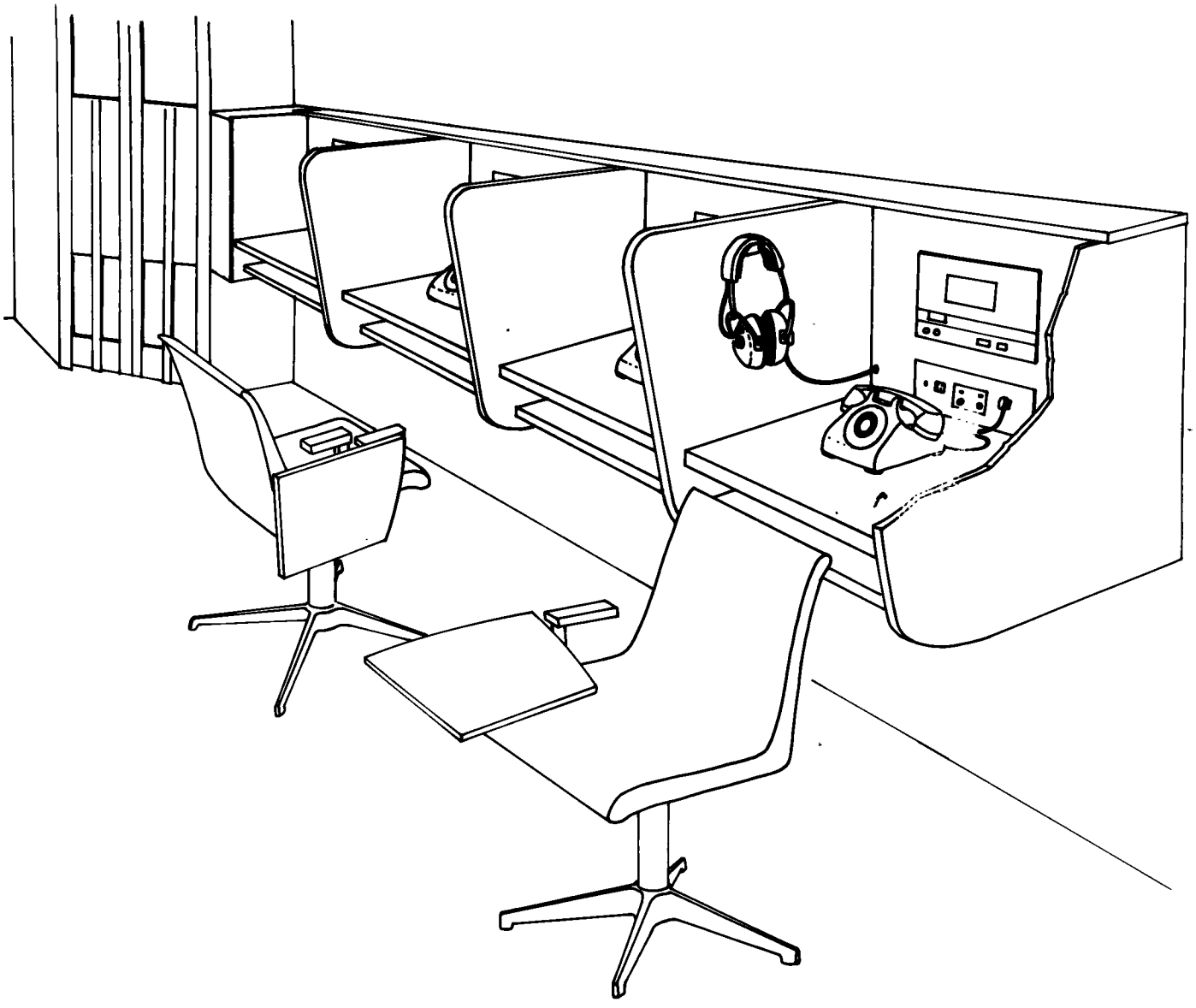

Figure 11

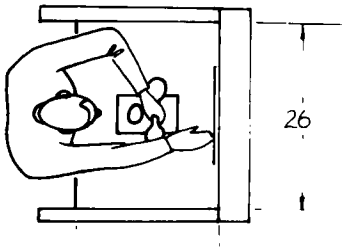

Human Factors
Telephone Practicum

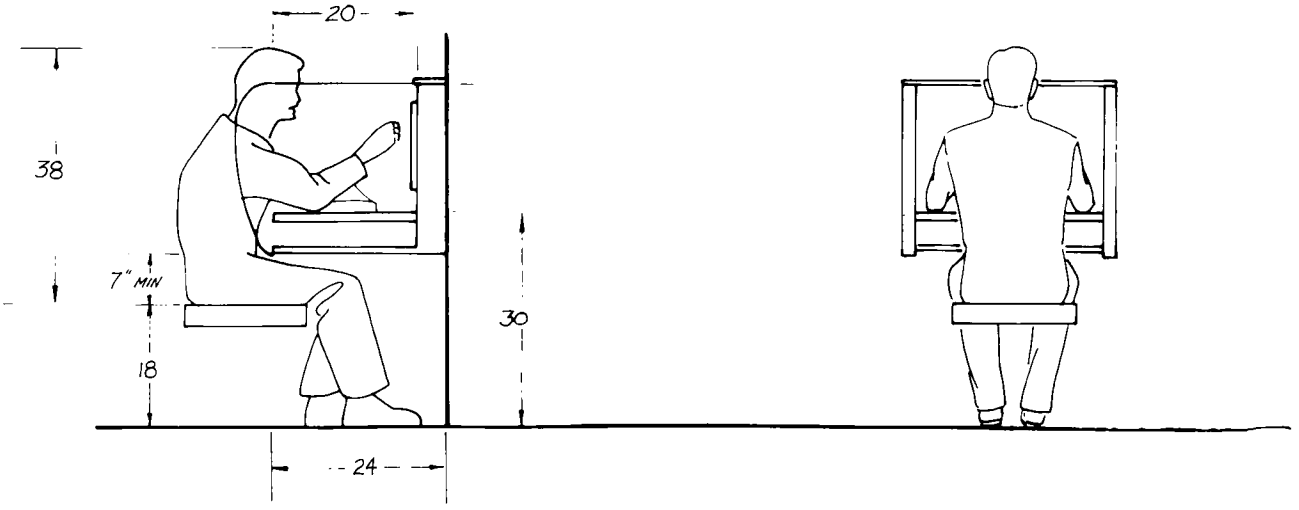

Figure 12

Equipment in Practicum Station

(Telephone not Shown)

Figure 13

TELEPHONE PRACTICUM STATION

The telephone practicum station enables students to develop their communication skills in a realistic telephone situation.

Thru multi-functional design the telephone practicum station serves a dual purpose. This flexibility is achieved by the use of a custom-designed swivel chair (Fig. 14). The swivel feature enables the chair to be used for phone practicum or lecture situations. With tablet arms in position, the students can take notes from the teacher or audio-visual programs. In this position the students would use their headsets. By turning 180° in their seats they are ready for telephone practice. At this station the students have the use of a standard telephone which is modified only by a sound amplification control. Some will learn to use the telephone in a normal manner while others, depending on their hearing loss, will use the phone in conjunction with their hearing aid.

The telephone can be plugged into one of two standard phone jacks. The plug on

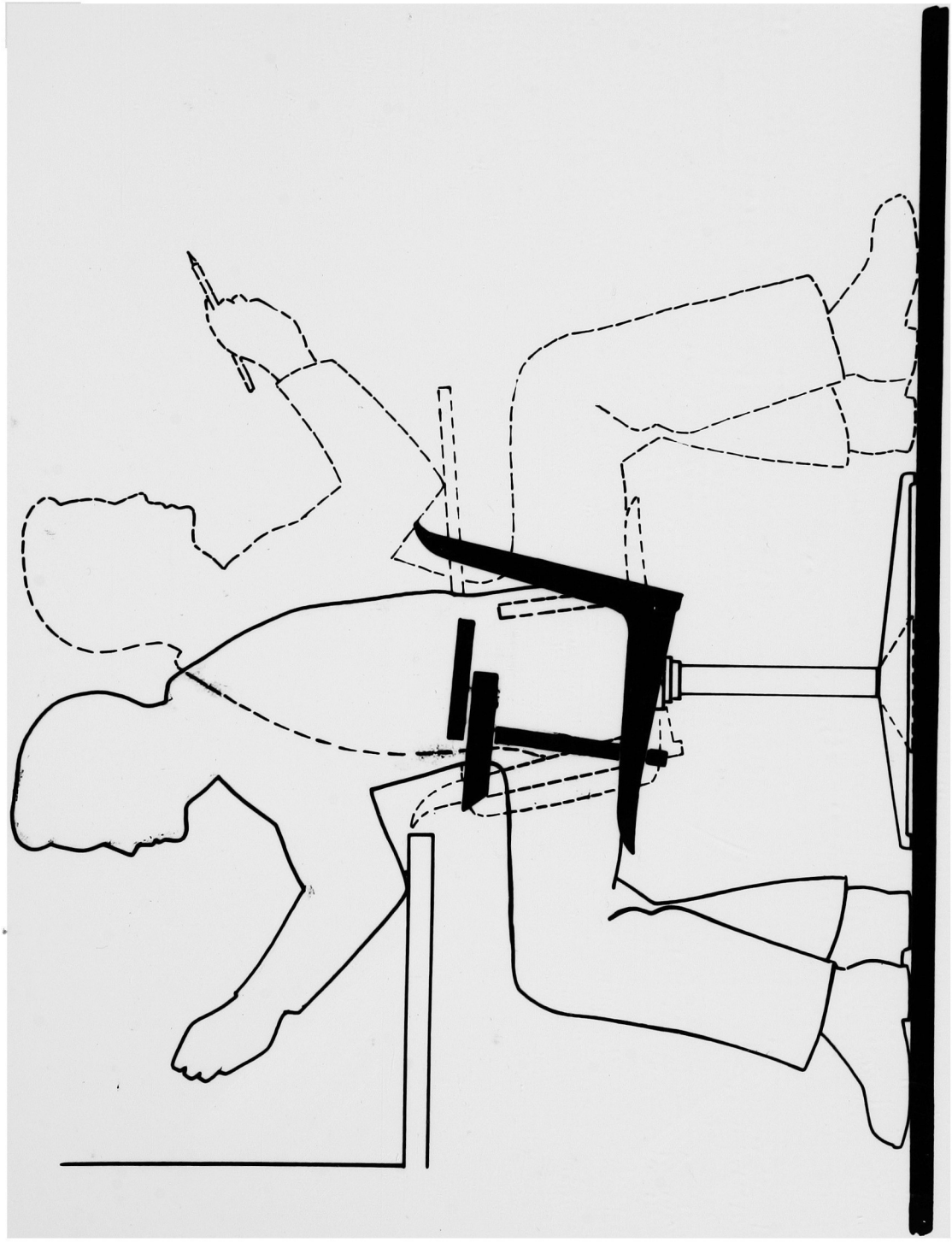

Figure 14

Missing Page

the right connects the telephone to the built-in tape recorder. The student will have the opportunity to listen to pre-recorded tapes of various voice types. (Because of pitch differences, some voices are more difficult to understand than others.) Students will also listen to messages of varying degrees of complexity. Programs will be selected for each student based on individual need.

The telephone jack to the student's left greatly extends his capability. Telephones when plugged into this side are interconnected through a centrex, controlled by the instructor. This system permits students to talk to one another individually or in conference style. Students also have the option to call anywhere on or off campus, an option affording them the opportunity to place actual phone calls to obtain specific information.

Sound Control

The carrel design selected gives both the advantage of privacy and a degree of sound control. The sides and back are covered with acoustical carpeting to minimize sound reverberation. This method appears to be the most effective means of sound controll within the limits of the open carrel concept.

Construction

Modular construction of two carrels per unit reduces building costs and simplifies mobility. Wiring and maintenance is facilitated by providing easy access, through a hinged door, to a wiring track in the top of the carrel (Fig. 15).

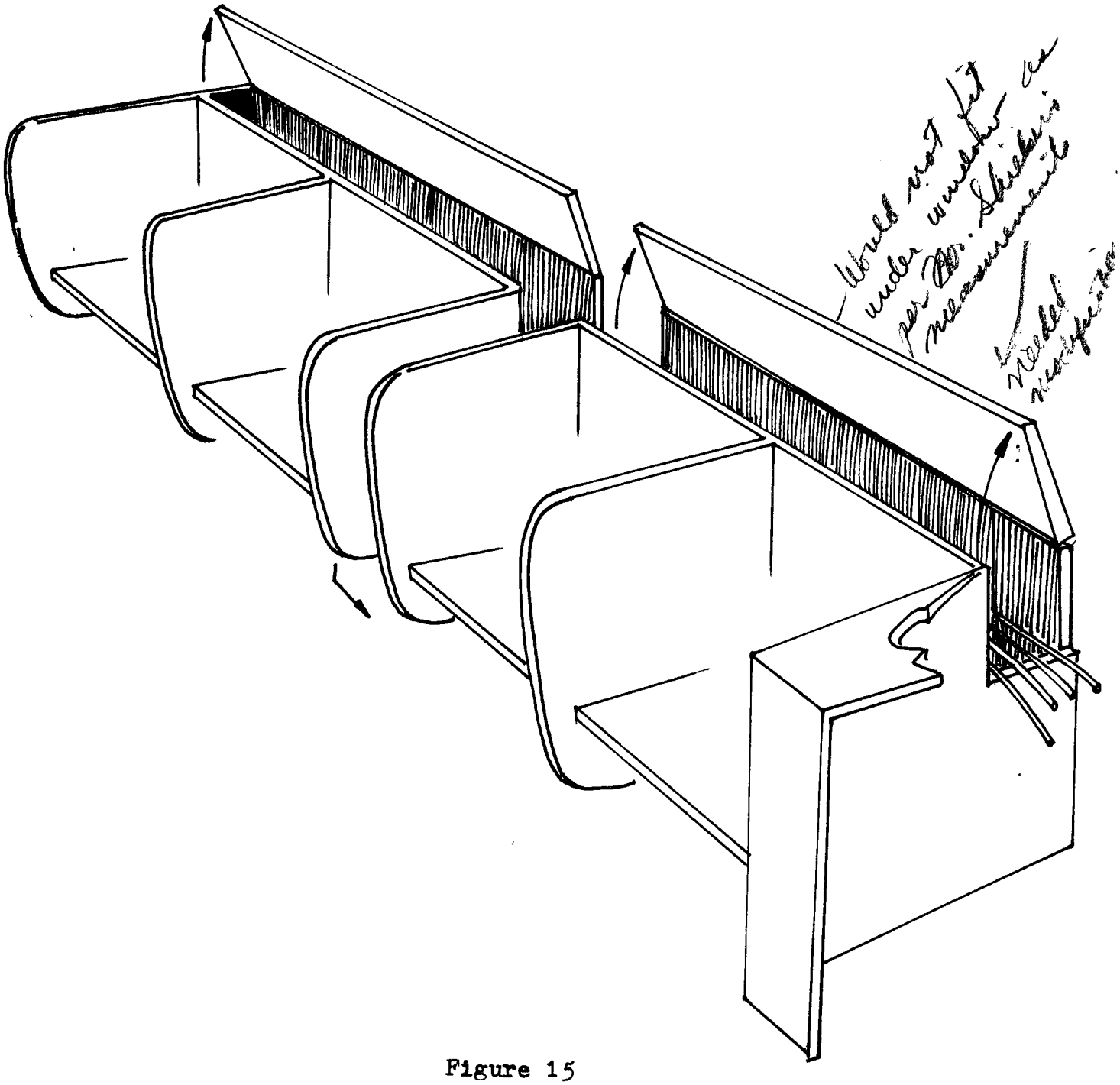

Figure 15

PAY PHONE STATION

Payphone Station

Figure 16

Human Factors
Payphone Station

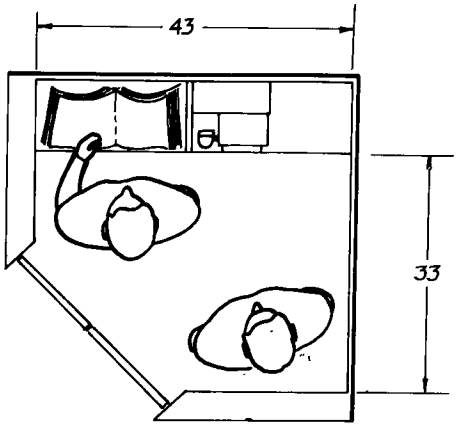

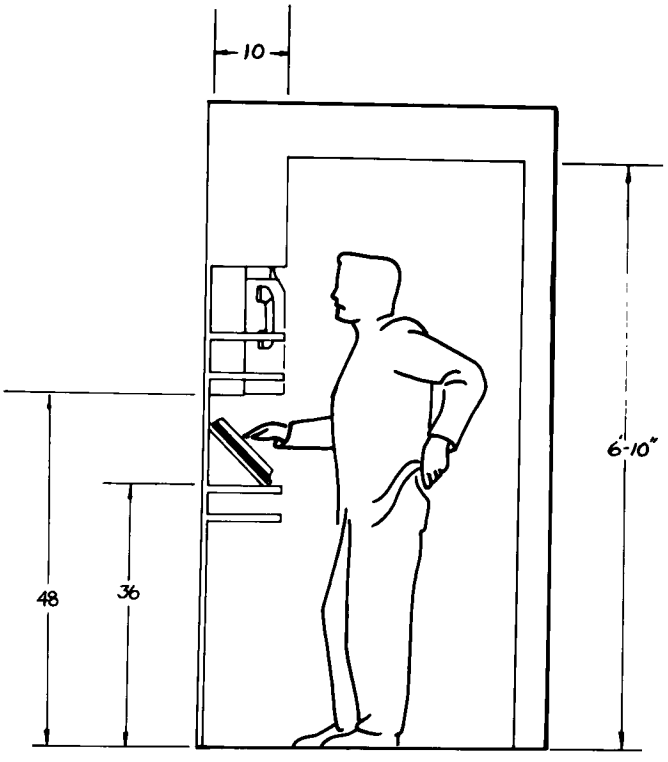

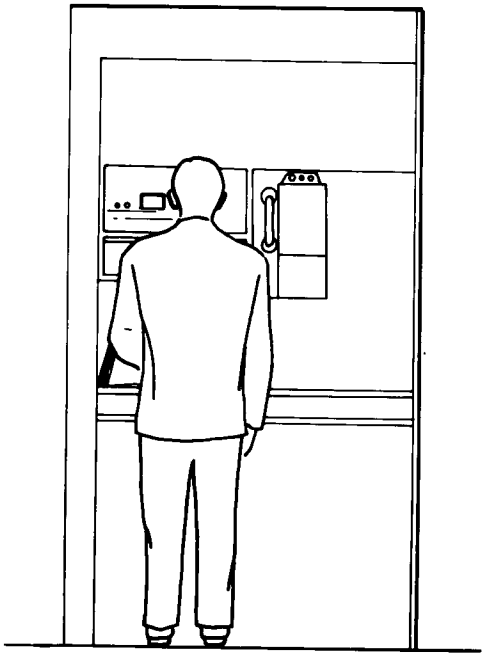

Figure 17

Equipment in Payphone Station

Figure 18

PAYPHONE STATION

It is essential that students be prepared for a variety of telephone situations. The public telephone booth provides many unique problems. Since these booths are seldom located in quiet areas, the student must learn to cope with outside audio interferences. Deaf students using the payphone in conjunction with their hearing aid will have to learn to discriminate between necessary and extraneous sounds. In the practice situation, common outside interference sounds will be channeled into the booth to simulate an actual environment. Using coins, making toll calls, and communicating with an operator are common problems all students will encounter.

Standard Phone Booth Adaptability

Early intentions were to obtain an actual telephone booth for this purpose; however, the need to have two persons in the booth at a time, for instructional purposes, precluded the use of such a booth. Accordingly, a payphone station had to be designed resembling the actual booth, but with modifications, such as special sound-control considerations. Although the booth need not be sound proof, it is important that any emitted sound be held to a minimum.

Location

Since the activities in the payphone station parallel those of the telephone practicum station, the most ideal

location is the carrel area. To conserve space, it was placed in the normally wasted space in the corner. Such a placement allows centralization of facilities as well as maximum space utilization.

Construction.

Construction design took into consideration, sound control, portability, lighting, visibility, ventilation, and maintenance.

Exterior walls are hollow and covered on the inside with acoustical carpeting. The thin, single-panel back walls utilize the natural buffer of the room walls for sound containment. The hollow ceiling contains the lighting, exhaust fan, and speaker system.

The unit is designed to be built in sections and assembled on site. This semi-permanent assembly allows for future removal or respositioning.

Ventilation

The ventilation system is designed primarily for the abatement of extraneous sounds from within the booth. It is necessary to maintain a minimum of 20 cfm air flow.[1] This is solely for elimination of body heat since equipment heat is negligible. The circulating air must pass through a series of baffles contained within the walls(Fig.19).

[1]Woodson, Wesley E., and Conover, Donald W., Human Engineering Guide for Equipment Designers (Los Angeles, California:University of California Press,1970),p.2-226.

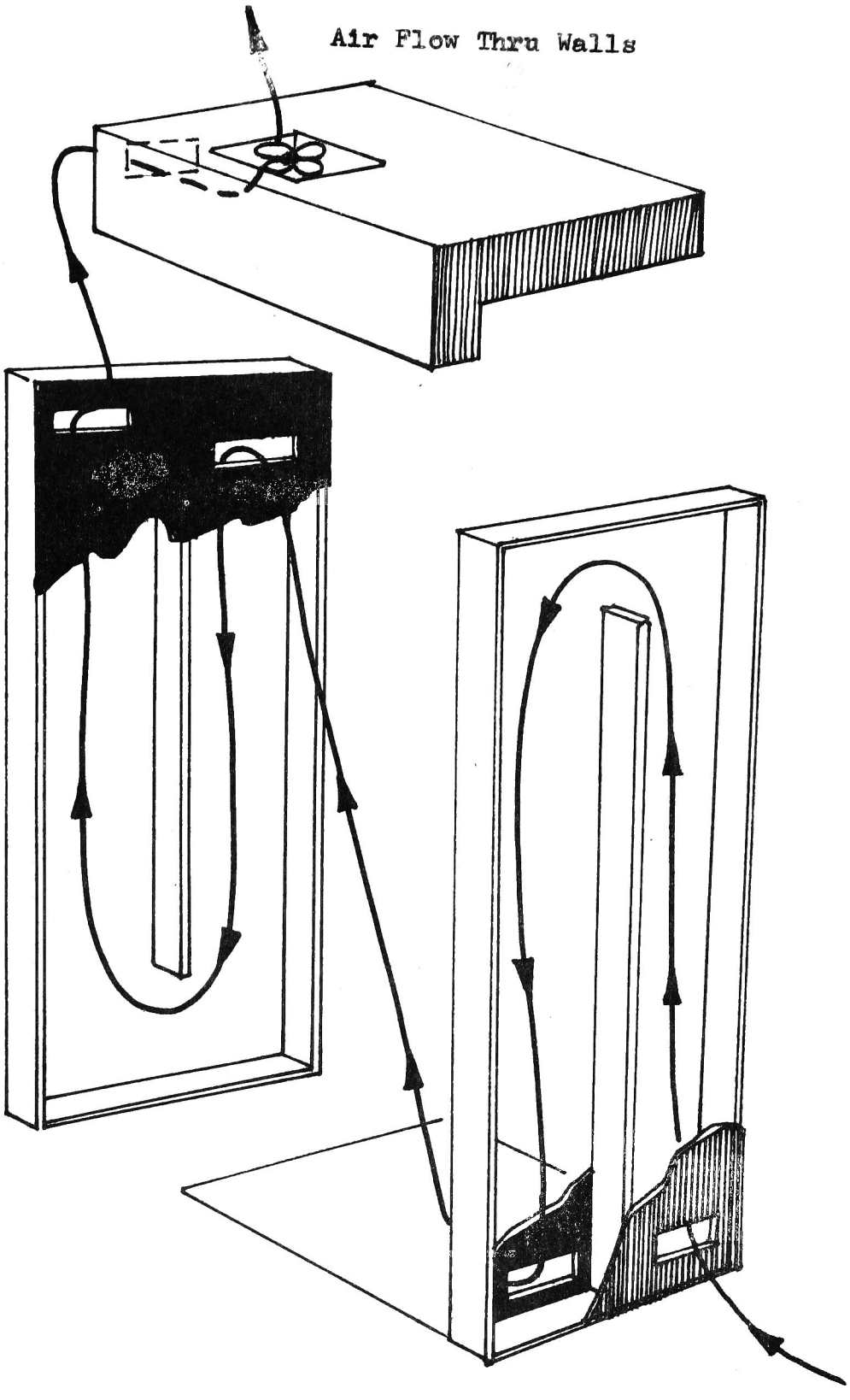

Figure 19

It is within these walls that most of the interior sounds are absorbed. The four and one-half inch exhaust fan, installed in the ceiling, is virtually noiseless. Although it has the high rating of 70 cfm, it produces only 18 dB SIL*.

*SIL - Speech Interference Level

TELETYPE

Teletype Booth

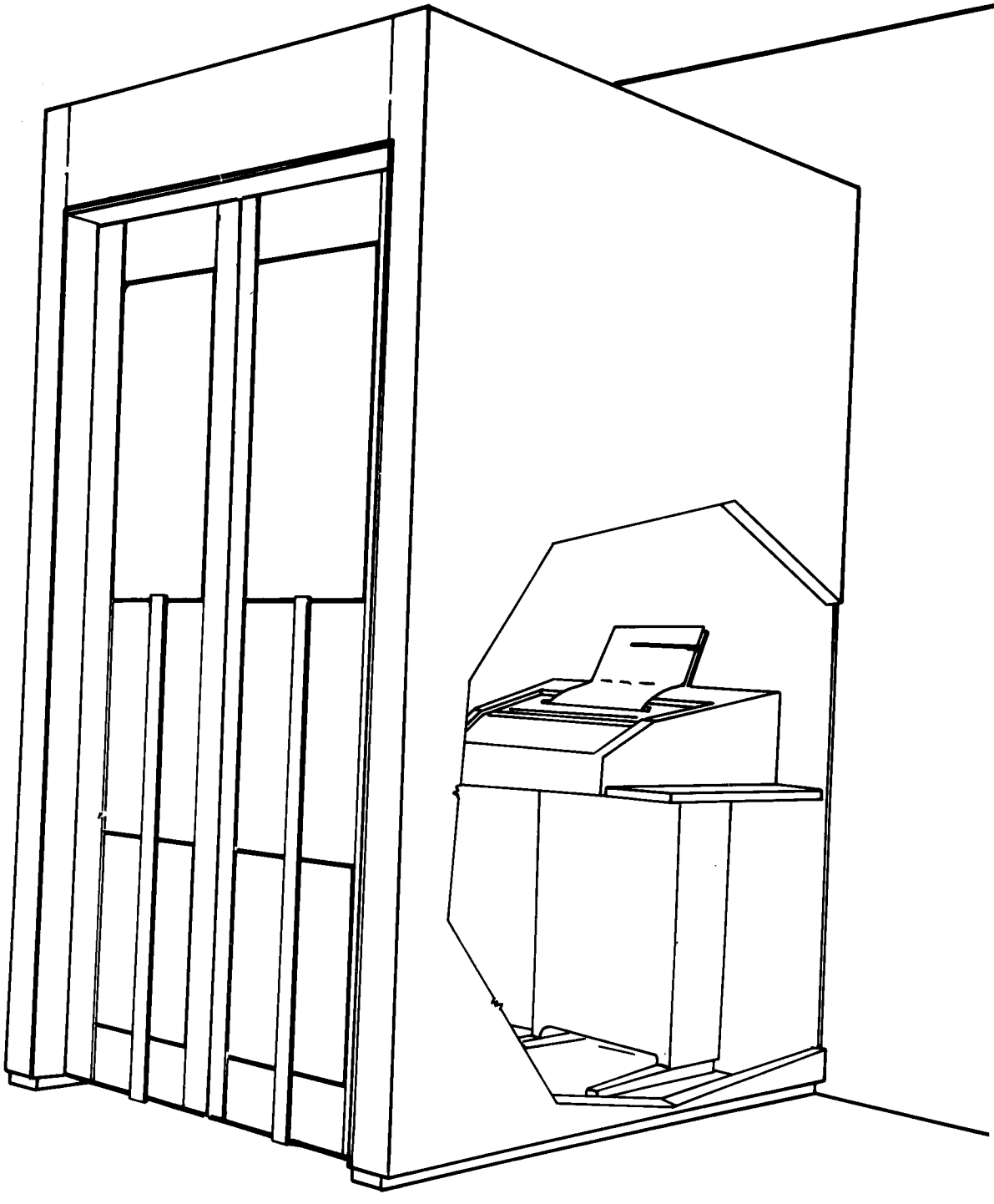

Figure20

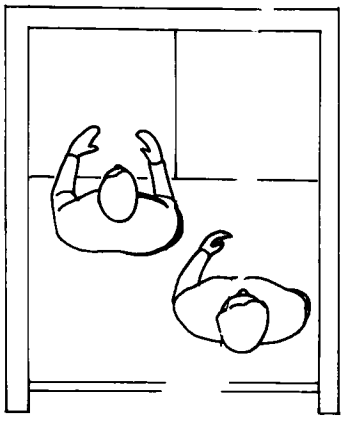

Human Factors
Teletype Station

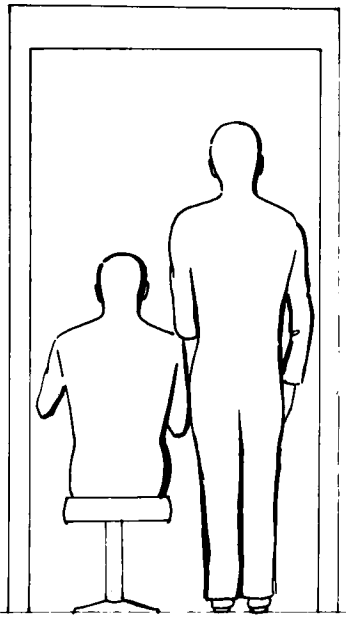

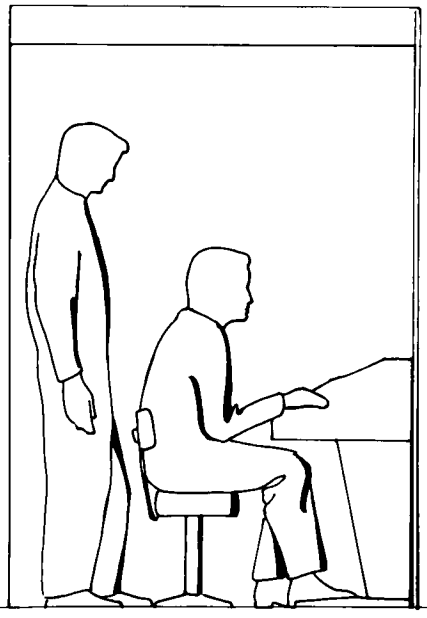

Figure 21

TELETYPE BOOTH

The teletype, originally developed for industry, provides a means for written material to be transmitted immediately through existing telephone lines. Messages can be sent and received between two specially designed typewriters. Written records of messages for future reference are an added advantage which makes the teletype a valuable communication's device. The ability to type is more essential to using the teletype than is the ability to hear. This single factor makes the teletype extremely useful to the deaf community.

Teletype equipment is expensive. For this reason, many users depend on rebuilt industrial and governmental equipment to reduce the initial cost. Older, rebuilt models, although not as quiet as current teletype equipment, have consistently proven their reliability.

The teletype booth, in the communication-aids room, is intended to facilitate a variety of equipment. There are several variations of the teletype concept currently available.

Design Considerations

Although all deaf students may learn to use the teletype, its primary purpose is for use by the totally deaf. A distinct advantage of teletype is the rapidity in which students are able to adapt to its use without extensive training.

Size

The size of the booth was established based upon the number of people and equipment it needed to contain. Although the booth will be used generally by one person, it must be large enough to accomodate at least two: a student and an instructor. — no shelves need storage

The booth was designed so that it can be assembled on site from smaller pre-fabricated units. This also allows for future relocation, if necessary.

Sound Control

Noise emitted from the TTY booth needed to be held to a minimum. Several measures were taken to contain noise within the booth. First, the teletype was housed inside a commercially built, sound-absorbing shroud. Noises penetrating the sound shroud should be absorbed by the

accoustically treated walls, ceiling and floor. These surfaces are covered with Ozite accoustical carpeting.

Rubber seals on the bi-fold doors assure additional protection against sound emission from the booth. Special precautions were taken to prevent sound from escaping through the ventilation ports (Fig.19)

Ventilation

The ventilation system in the TTY booth is similar to that of the payphone booth, in that it uses the hollow walls as air ducts. Interior noises are diminished inside the hollow, sound-absorbing ducts, while fresh air is allowed free circulation.

Lighting

The lighting selected for the TTY booth produced 50-64 foot candles at 60 inches. These figures are based on actual tests with fluorescent lights using a similar type diffusion screen. This is well above the 50 foot candles recommended for typing.[1] A similar lighting level is provided in all other booths in the communication laboratory.

---

[1]Woodson, Wesley E., and Conover , Donald W., Human Engineering Guide for Equipment Designers (Los Angeles Calif.: University of California Press, 1970) p. 2-181.

VISTA TELEPHONE

Vista Telephone Station

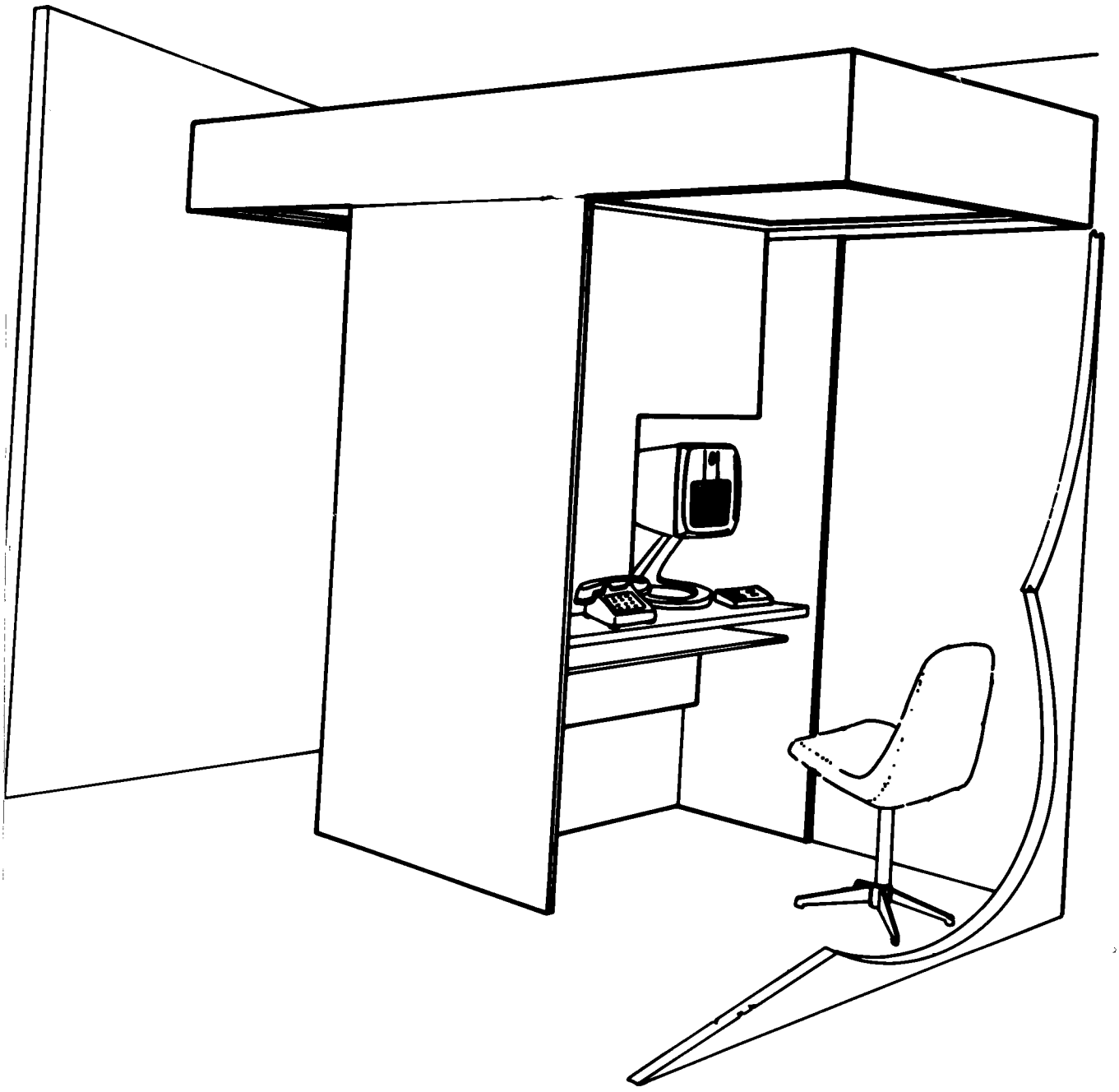

Figure 22

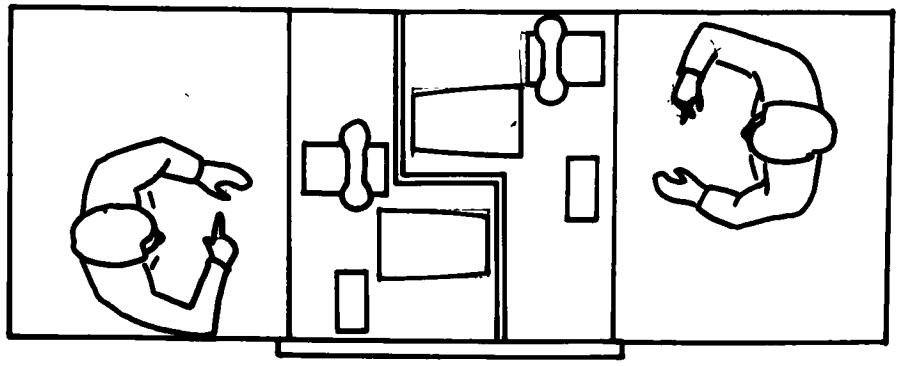

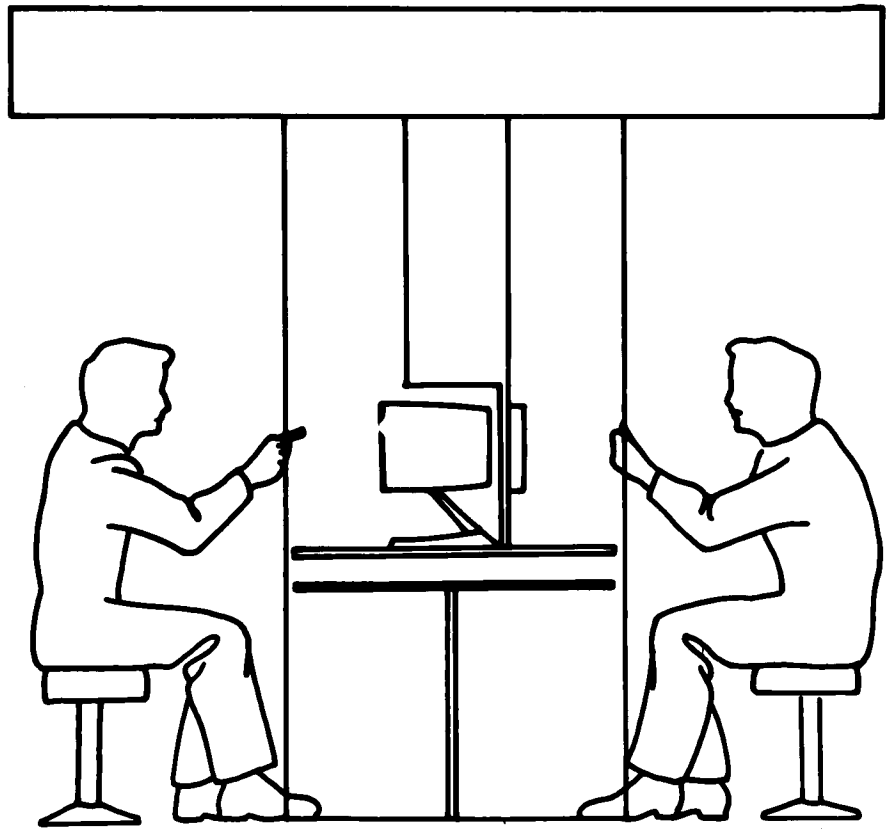

Figure 23

VISTAPHONE

Vistaphone, sometimes referred to as television telephone, is unique in that it allows an individual to see with whom he is communicating. Primarily designed for hearing persons, it is easily adapted for use by the deaf. While the telephone handset can be used in a normal manner, the visual function is mainly used for signing and lip reading.

The vistaphone stations are interconnected to allow students to communicate with one another in the room. Like the telephones, the vistaphones can also be used to call outside the room to other parts of the campus, city, or country.

Original Design Concept

The original design of the unit included an equipment display area (Fig. 24). The display area was intended to have various devices for the deaf permanently installed for ease of demonstration to both students and visitors.

Examples of the devices in such a display would be a sound-activated vibrator, a doorbell strobe light, telephone U.V. meter, etc. By pushing a button the student could have the device explained to him and cause it to become activated.

Due to structural changes in the room, the vistaphone unit had to be redesigned. Since the space allocation was smaller, the new unit could not include the demonstration area.

Early Vista Telephone Station Design

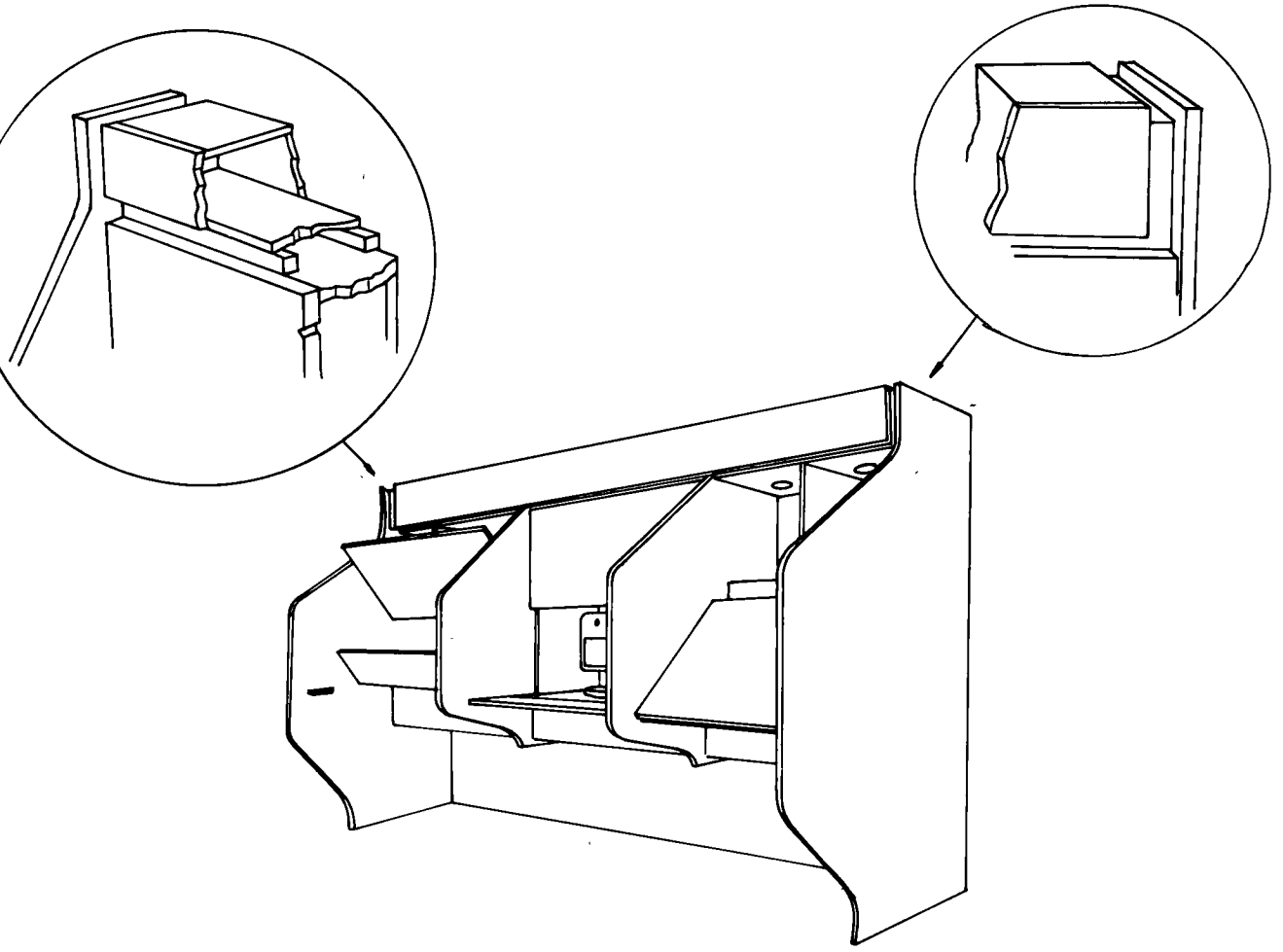

Figure 24

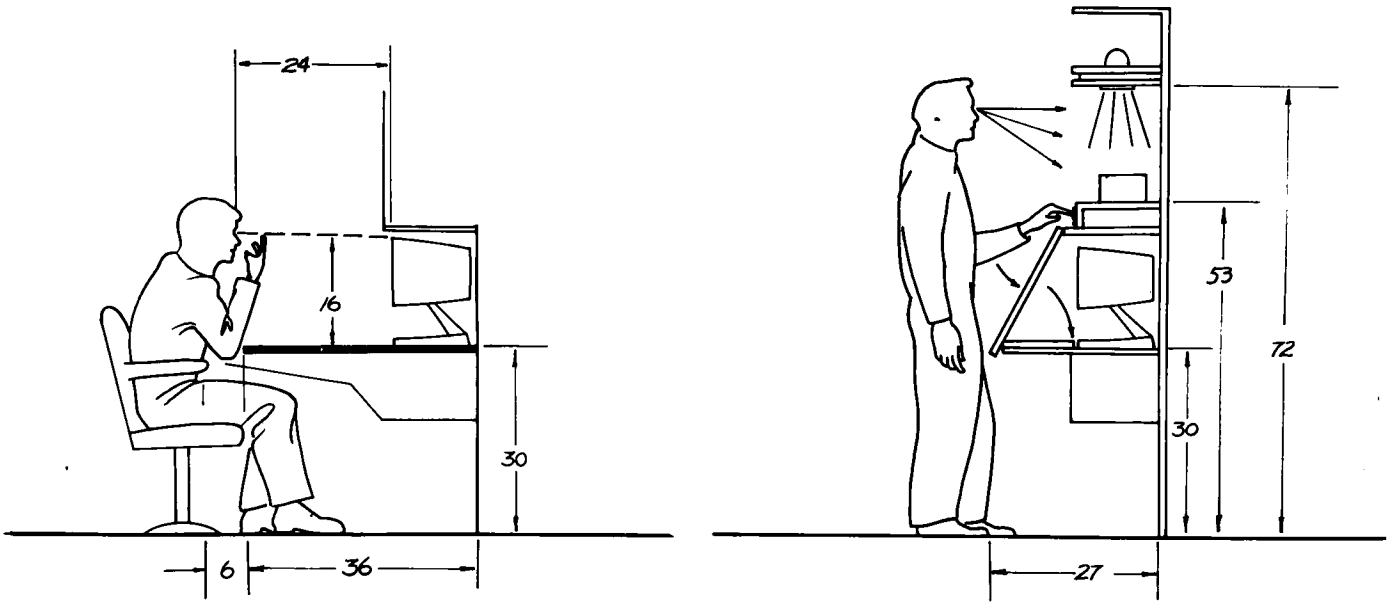

Figure 24

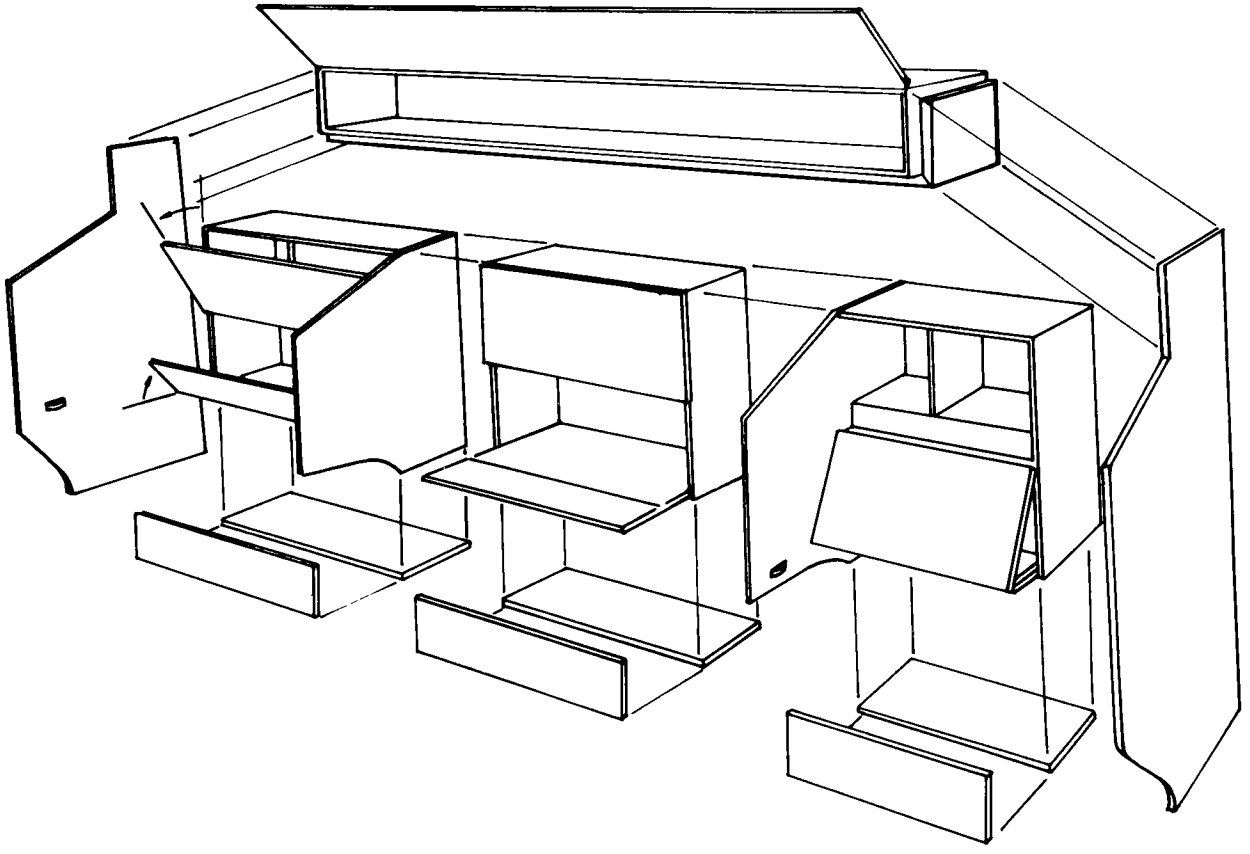

Figure 24

DESIGN CONSIDERATIONS

Minimum Distances

One of the most important factors which dominated the design of the unit was the minimum distance required between the person's face and the T.V. camera. Through actual experimentation with the unit at Stromberg-Carlson in Rochester, it was determined a minimum of twenty-four inches was required, as opposed to the thirty-six inches suggested in the manufacturer's manual. The unit was designed relative to the twenty-four inch face distance and the thirty-inch table top height required.

Lighting

The vistaphone requires normal classroom lighting. The unit is designed with its own built-in lighting system to insure even, as well as shadowless, illumination, regardless of its placement in the room.

Privacy

The semi-enclosed booth design offers a degree of privacy which some students regard as necessary. Because the booth is isolated in the room, doors or drapes seemed unnecessary. Locating the vistaphone area near the door also allows its use by the outsiders without disturbing a class in progress.

Construction

For portability, the unit will be built in two sections. The removable lighting section will be secured to the base at the site. The thirty-five inch width of the base allows it to be easily transported through the thirty-six inch class-room doors.

Early Stages of Construction

Figure 25

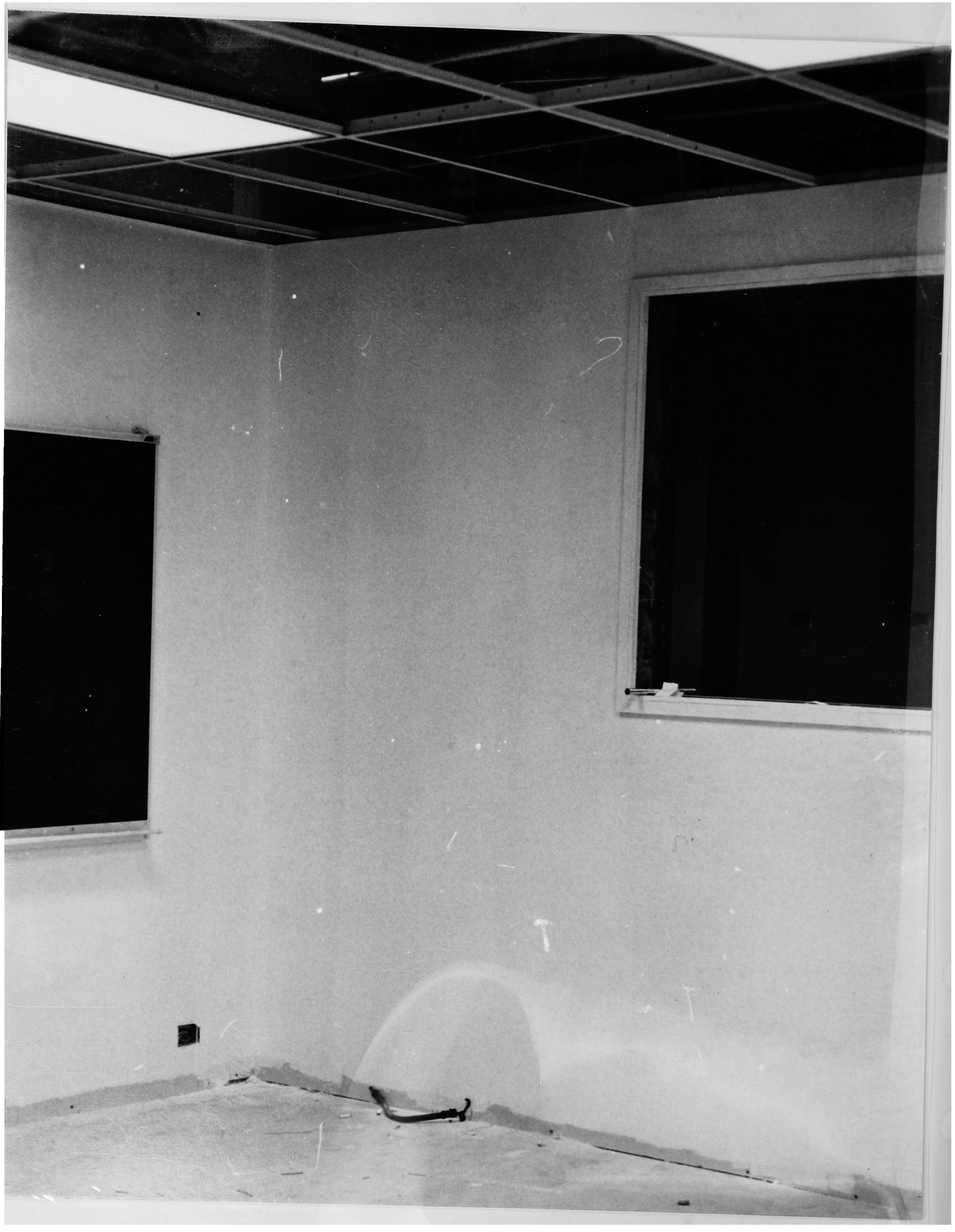

PRE-SHOP DRAWINGS

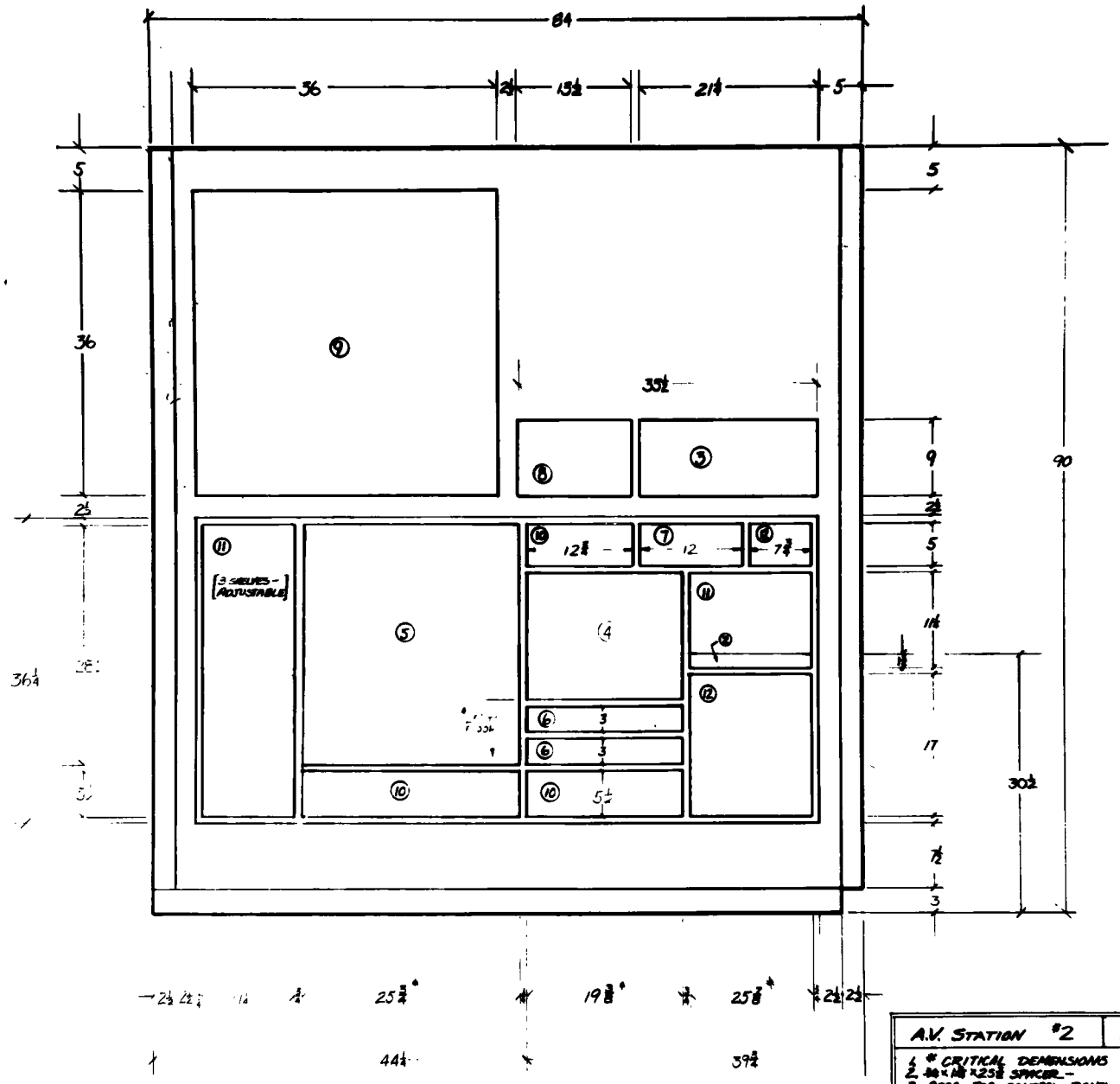

A.V. STATION #2	SCALE 1½"-1'

1. # CRITICAL DEMENSIONS
2. 30 x 14 x 25¾ SPACER -
3. AREA FOR CONTROL PANEL - (NOT CUT OUT)
4. VIDEO TAPE AREA
5. T.V.
6. STUDENT AMPS
7. TEACHER AMP.
8. TAPE RECORDER
9. SCREEN
10. DRAWER
11. DOOR
12. BLANK

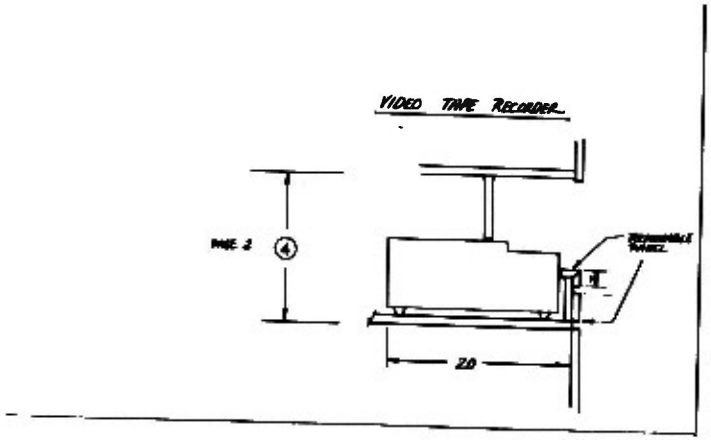

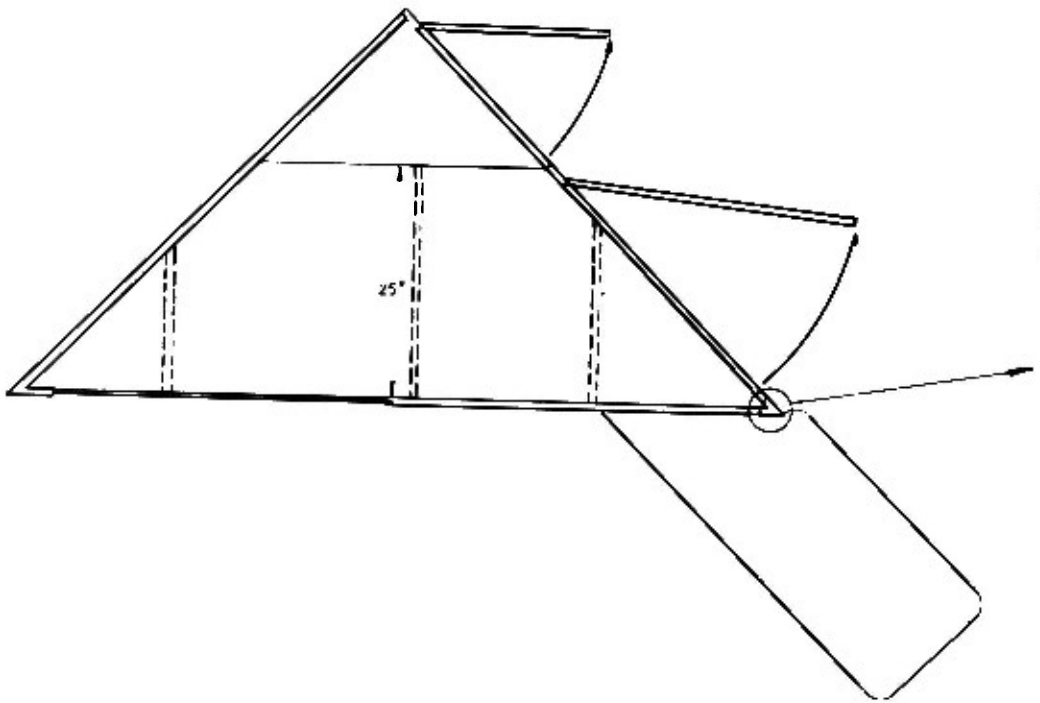

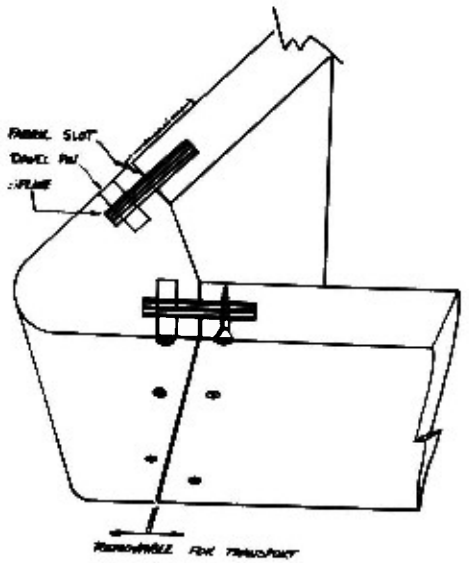

A.V. STATION (TOP VIEW) #3 | SCALE 1½" - 1'

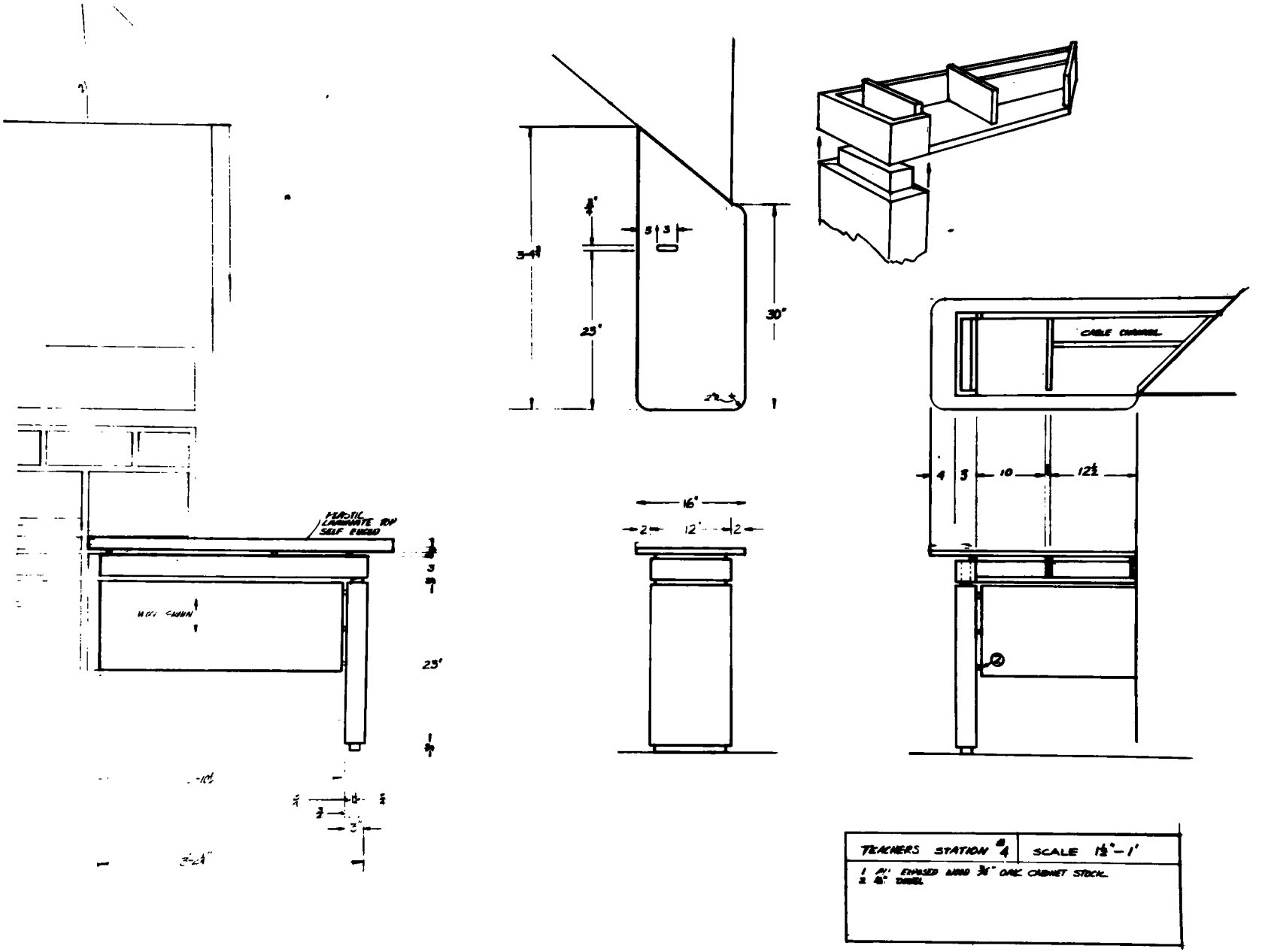
PLASTIC LAMINATE TOP SELF EDGED
23"
30"
16"
12"
CABLE CHANNEL
TEACHERS STATION #4
SCALE 1½"-1'
1 PIT EXPOSED WOOD ¾" OAK CABINET STOCK
2 ⅝" DOWEL

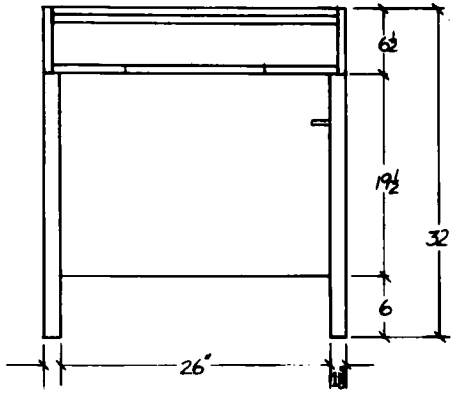

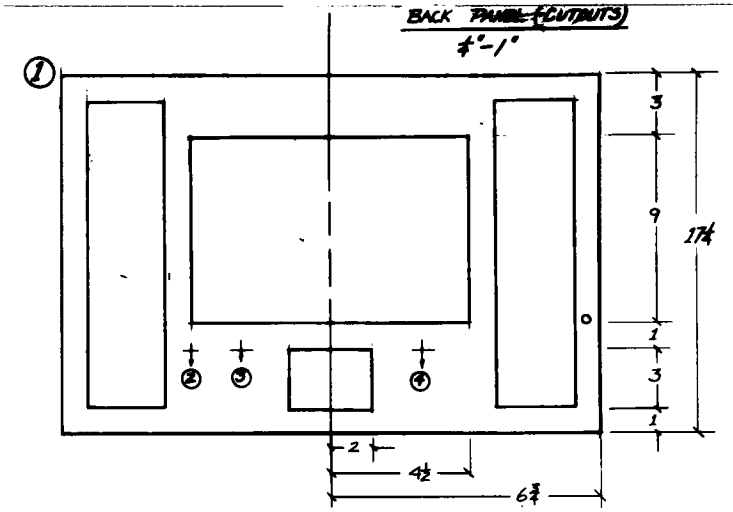

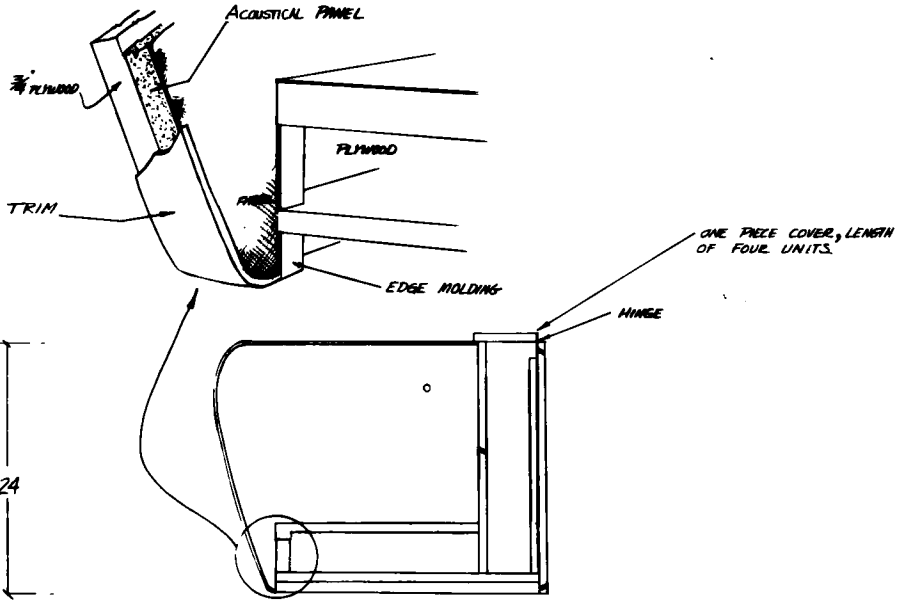

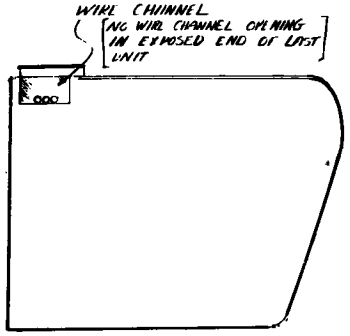

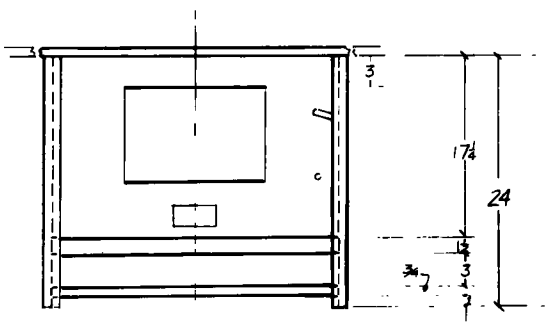

TELEPHONE PROTECTION STATION SCALE 1½"-1'

① BACK PANEL - FABRIC SUPPLIED BY SCREEN
② METAL SIT SWITCH
③ & ④ TELEPHONE JACK

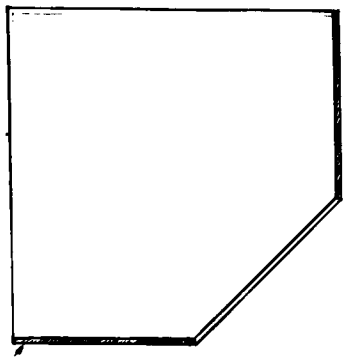

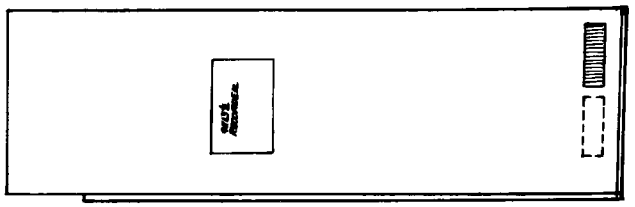

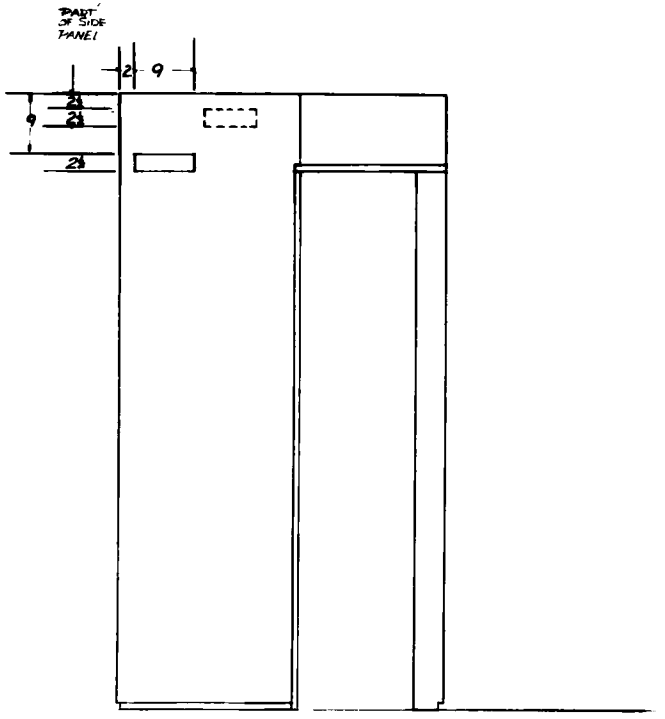

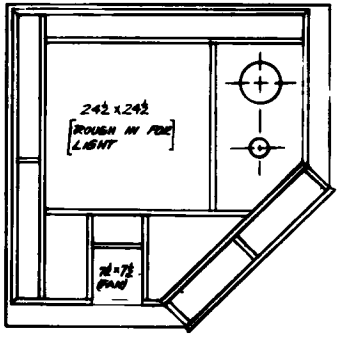

PAYPHONE STATION	SCALE 1"=1'

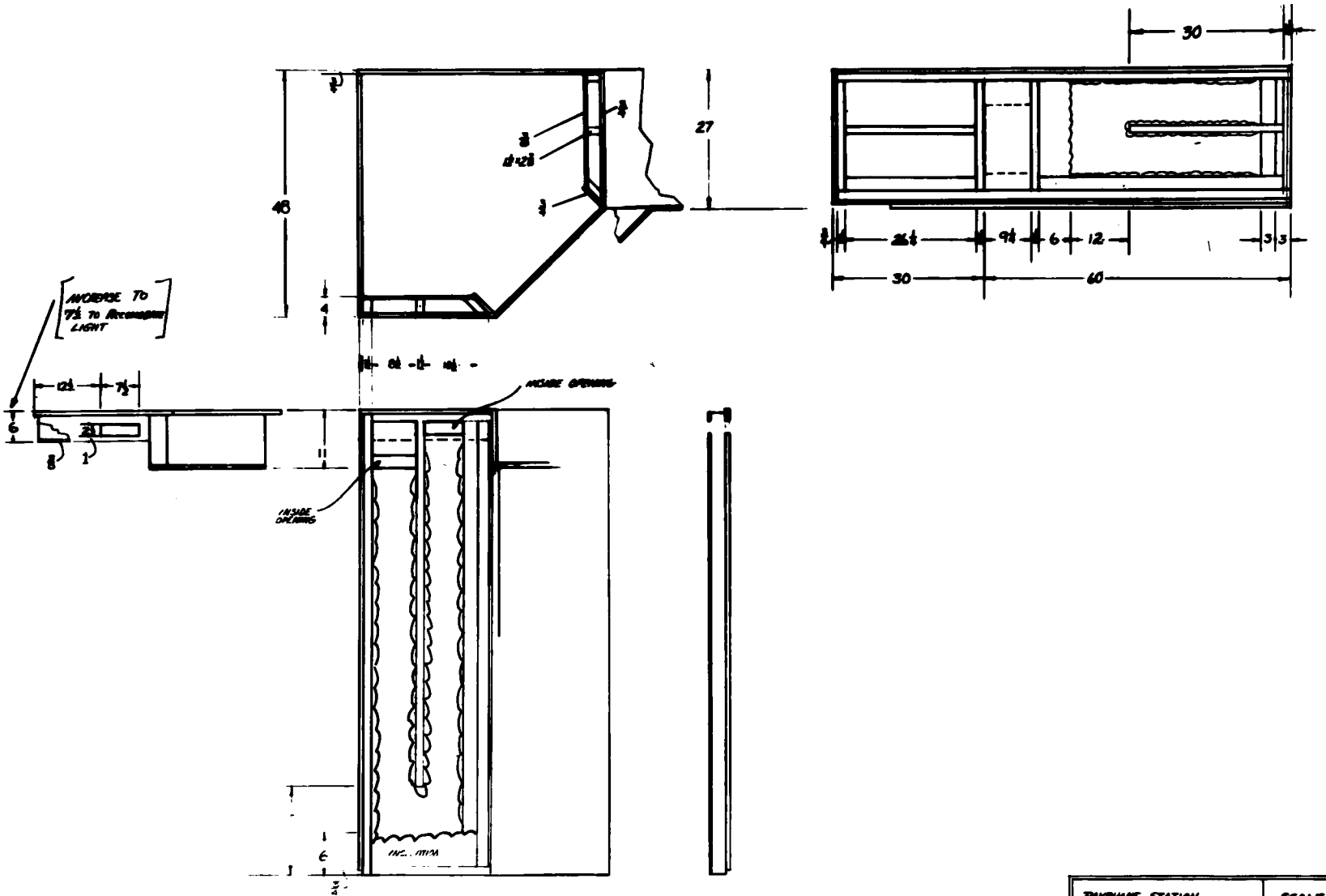

PAYPHONE STATION	SCALE 1"–1'
WALL CONSTRUCTION & VENTING	

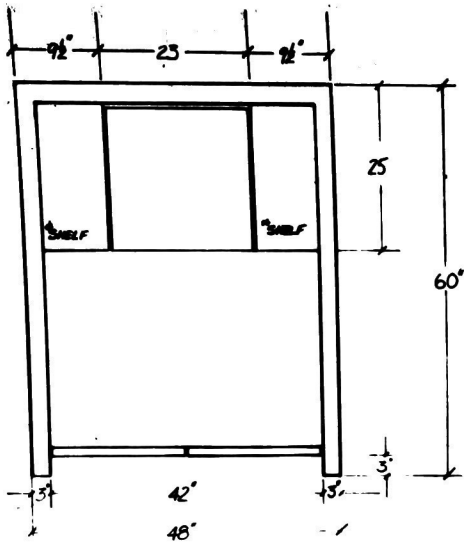

SHELVES ADJUSTABLE ON ADJUSTABLE TRACK

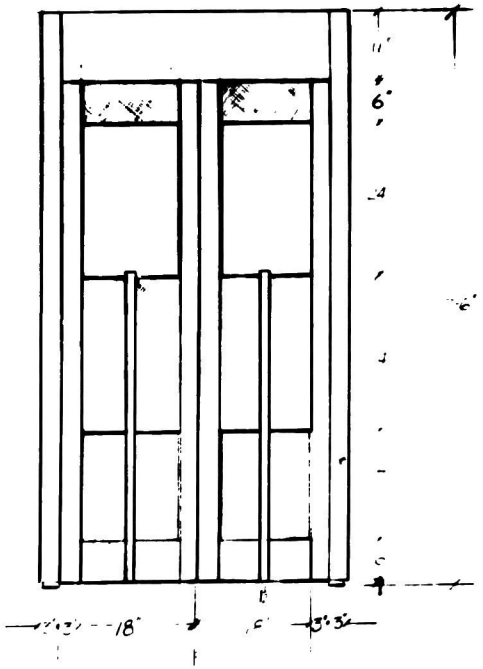

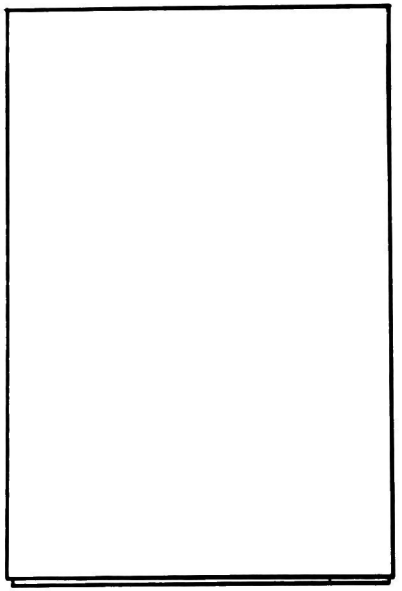

T.T.V. Basin	RM 3.115	nts	SCALE 1"-1'

1- UNIT TO HOUSE 1 PC. TELETYPE EQUIPMENT
2- TO BE CONSTRUCTED TO ALLOW ASSEMBLY AND DISASSEMBLY ON SITE.
3. ADJUSTABLE SHELVES
4. LIGHTING & VENTILATION

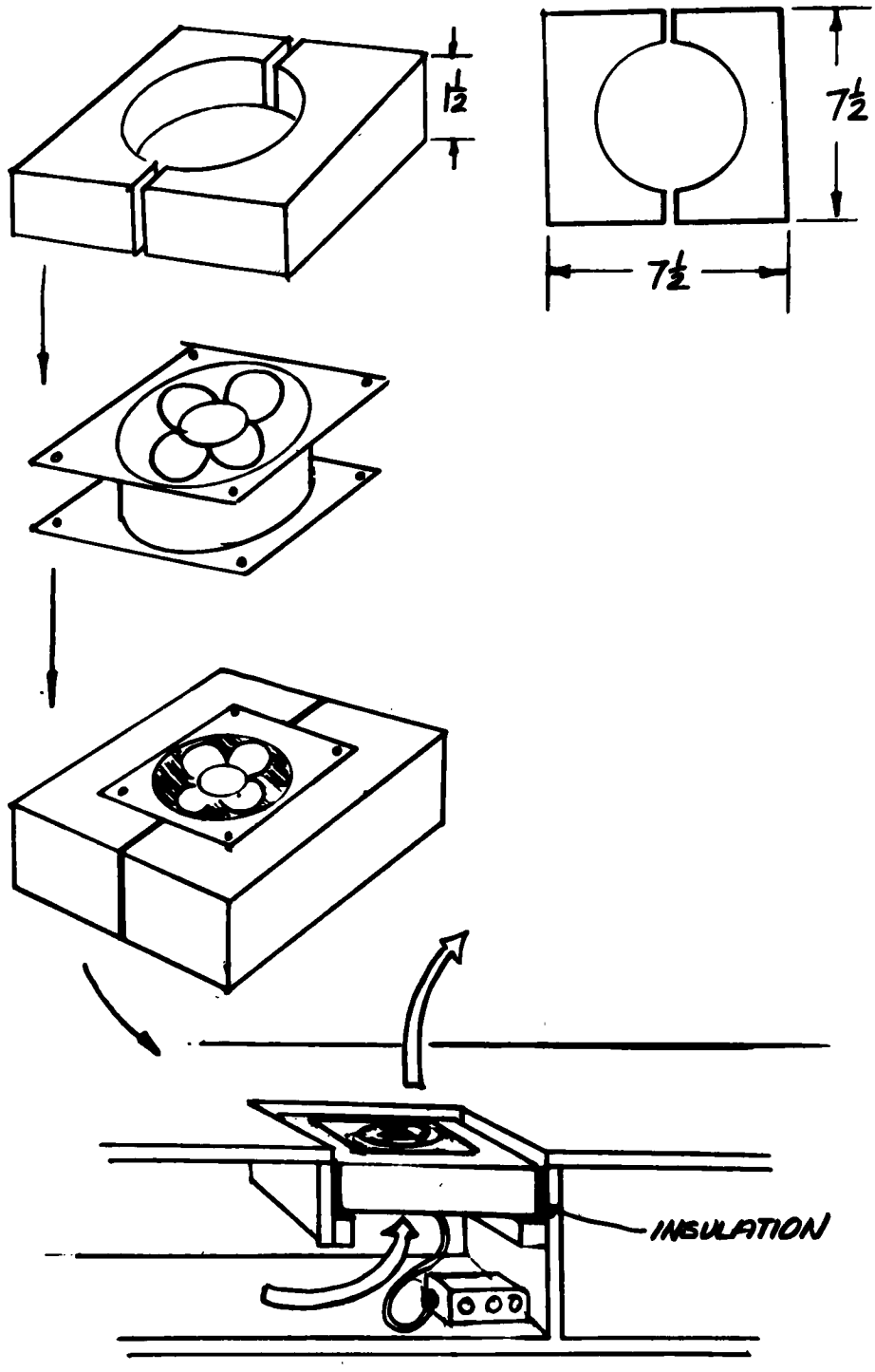

FAN - CEILING PAYPHONE BOOTH

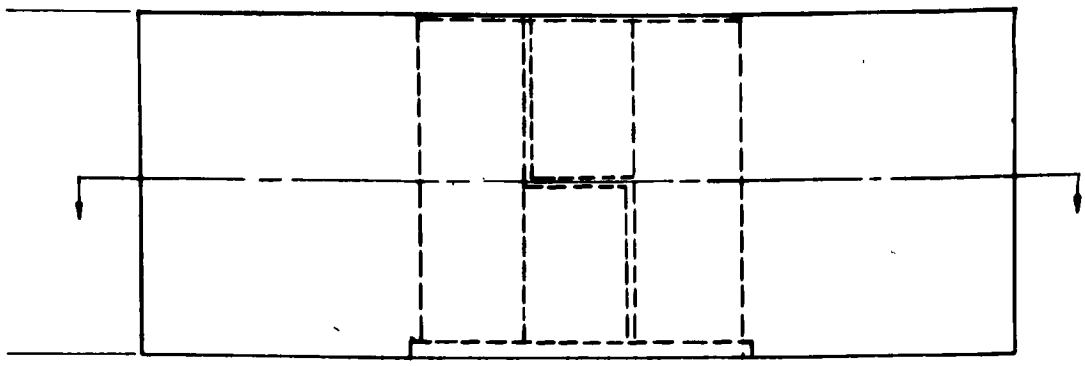

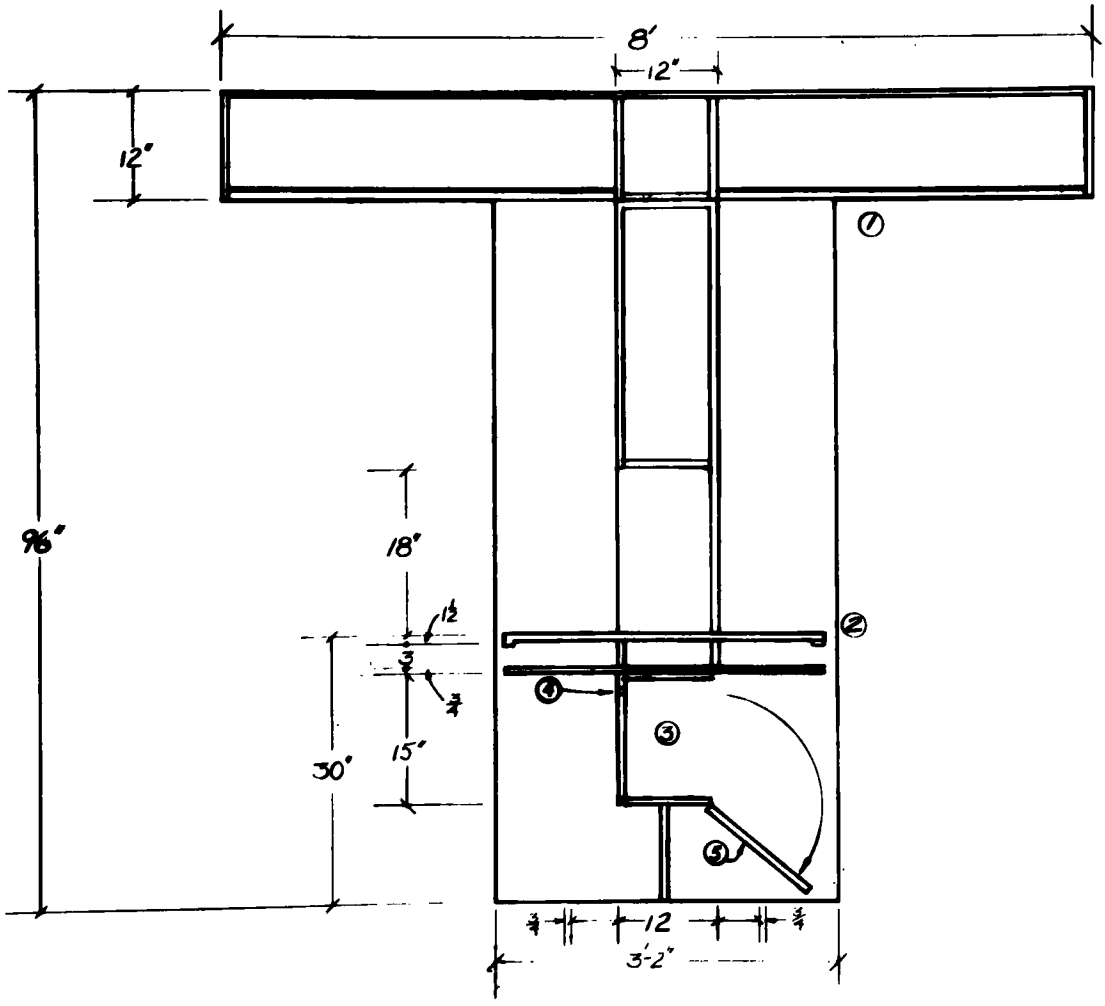

VISTAPHONE STATION	RM 3.115	SCALE 1"-1'

① TOP & BOTTOM SECTION SEPARATE - JOINED ON SITE
② WRITING SURFACE PLASTIC LAMINATE ALSO EDGE
③ SERVICE UNIT HOUSING
④ VENTILATION HOLES
⑤ HINGED SERVICE DOOR
⑥ LIGHT SWITCH

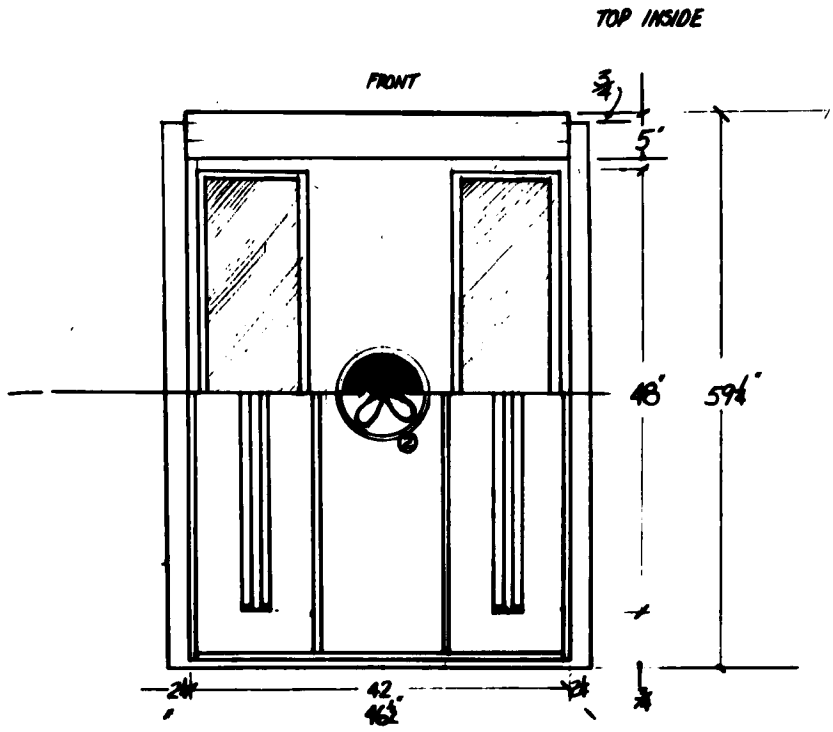
TOP INSIDE
FRONT
3/4"
5"
48"
59 1/4"
42"
46 1/2"

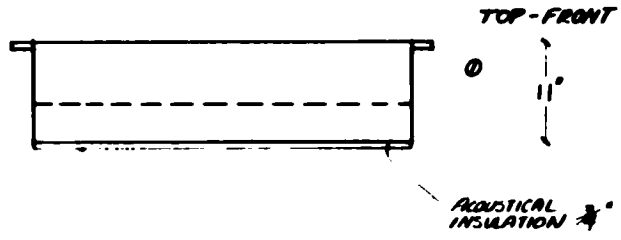
TOP - FRONT
11"
ACOUSTICAL INSULATION 1"

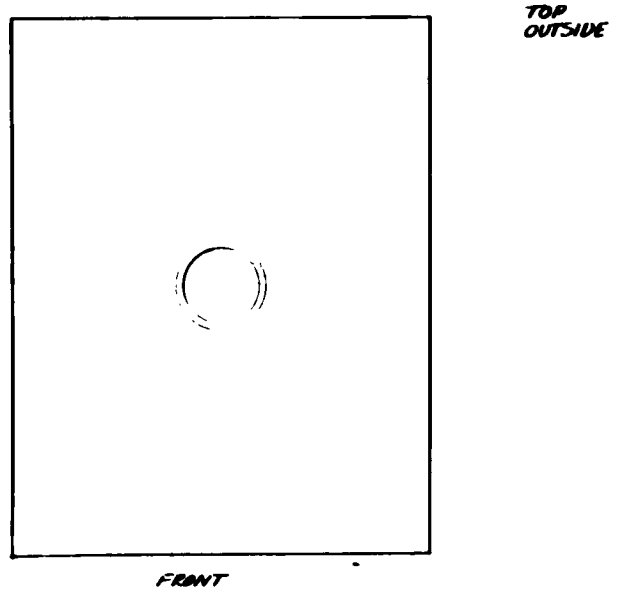
TOP OUTSIDE
FRONT

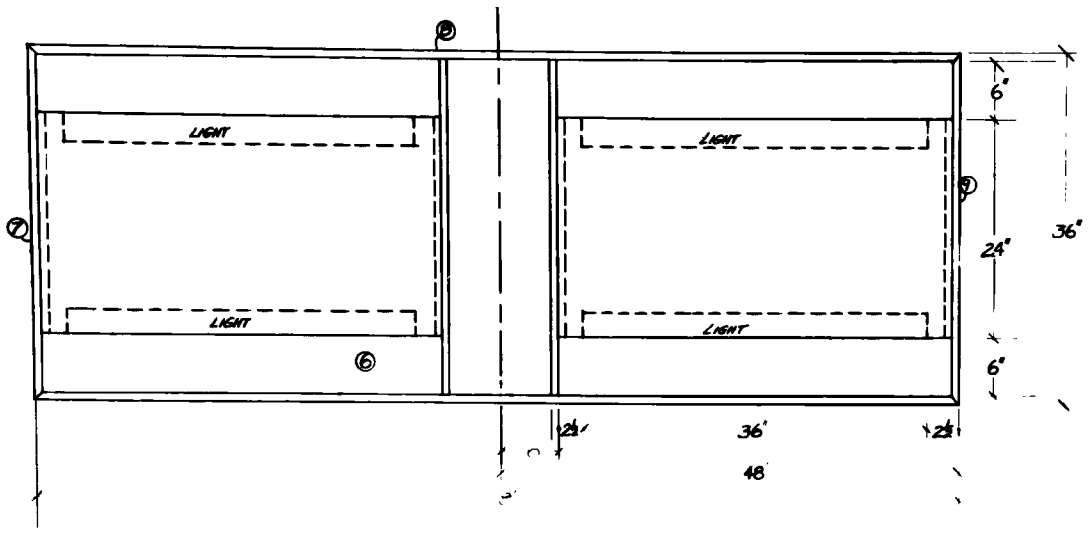

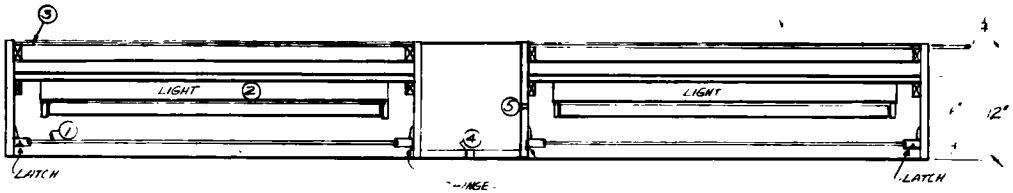

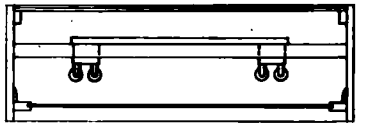

[illegible]	SCALE 1½" - 1'
	RAI 3.115

0 [illegible]
2 [illegible] FIXTURE - 2 LITE
3 [illegible]
4 [illegible]
5 [illegible]
6 [illegible]
7 [illegible]
8 [illegible]
9 [illegible]

20
19
27'6"
14
4
4'9"
8'
3'4"
3'2"
3'6"
9'3"

Equipment During Installation

July 17, 1974

Equipment During Installation

(July 17, 1974)

Figure 27

Finished Room

BIBLIOGRAPHY

Da-lite Screen Company, Inc. Rear-Projection Screens. Technical Manual. New Rochelle, New York

Eastman Kodak Company. Audiovisual Projection. Kodak Pamphlet No. S-3. Rochester, New York: 1971.

Eastman Kodak Company. Rear-Projection Cabinets. Kodak Pamphlet No. S-29. Rochester, New York: 1969.

Johnson, Donald D., and Rubenstein, Charissa "Communication Aids Course-Rationales, Problem Statements and Objectives" - Survey Conducted at NTID Communication Center, Rochester, New York, Dec. 31, 1972.

Woodson, Wesley E., and Conover, Donald W. Human Engineering Guide for Equipment Designers. Los Angeles, Calif.: University of California Press, 1970.